CATALOGUE

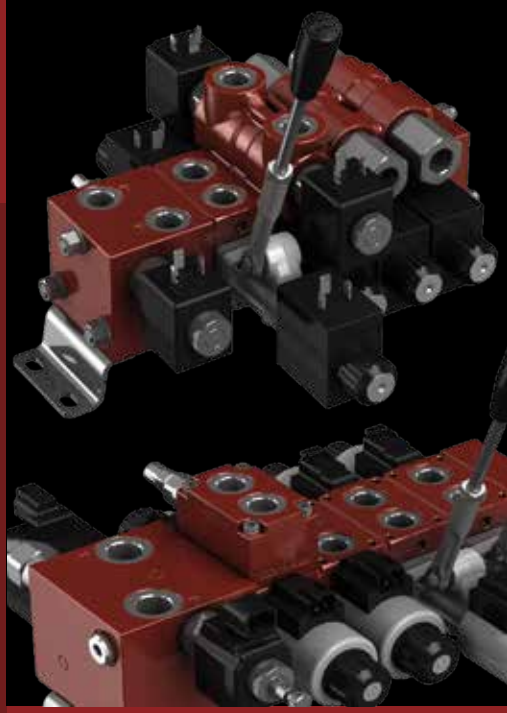

SDE030
SDE060

Directional control valves with direct acting solenoid

A member of INTERPUMP GROUP

walvoil
FLUID POWER E|MOTION

General informations

Simple, compact and heavy duty designed sectional valves from 1 to 10 sections.

SDE030

- Aluminium alloy inlet sections, available in several configurations.
- Cast iron working sections
- Different types of spools.
- Optional check valves on workports.
- Available for parallel circuit.
- On/off solenoid controls.
- Emergency handlever available.

SDE060

- Steel inlet sections, available in several configurations.
- Cast iron working sections
- Different types of spools.
- Different options to be flanged on the workports side
- Available for parallel and series circuits.
- On/off solenoid controls.
- Emergency handlever available.

Additional information
This catalogue shows the product in the most standard configurations.
Please contact Sales Dpt. for more detailed information or special request.

WARNING!
All specifications of this catalogue refer to the standard product at this date.
Walvoil, oriented to a continuous improvement, reserves the right to discontinue, modify or revise the specifications, without notice.

WALVOIL IS NOT RESPONSIBLE FOR ANY DAMAGE CAUSED BY AN INCORRECT USE OF THE PRODUCT.

4th edition March 2017

Content

Working conditions 4
Standard threads 4
Accessories
Coils and connectors 56
Fixing brackets 59
Installation and maintenance 61

SDE030

Dimensions and hydraulic circuit 5
Complete sections ordering codes 6
- Inlet section
Part ordering codes 8
Dimensions and hydraulic circuit 10
Options 13
- Working section
Part ordering codes 16
Dimensions and hydraulic circuit 18
Spools 20
Control kits 21
Lower port relief valves 22
Side port relief valves 22
Check valves 23
Solenoid operated check valves 24
- Outlet section
Dimensions and hydraulic circuit 25

SDE060

Dimensions 27
Hydraulic circuit 29
Complete sections ordering codes 30
- Inlet section
Part ordering codes 32
Dimensions and hydraulic circuit 34
Options 38
- Working section
Part ordering codes 44
Dimensions and hydraulic circuit 45
Lower port relief valves 46
Spools 47
Control kits 48
- Flangeable valve blocks
Antishock valves 50
Check valves 51
Solenoid operated check valves 52
Counterbalance valves 54
- Outlet section
Dimensions and hydraulic circuit 55

Working conditions

This catalogue shows technical specifications and diagrams measured with mineral oil of 46mm²/s - *46 cSt* viscosity at 40°C - *104°F* temperature.

		SDE030	SDE060
Nominal flow rating		30 l/min - *7.9 US gpm*	30 l/min - 60 l/min *7.9 US gpm - 15.8 US gpm*
Operating pressure (max.)		250 bar - *3600 psi*	315 bar - *4600 psi*
Back pressure (max.)	*outlet port T*	210 bar - *3050 psi*	
	outlet port T, with lever control	30 bar - *435 psi*	
Internal leakage (max.) A(B)⇒T	*Δp = 100 bar - 1450 psi fluid and valve at 40°C - 104°F*	14 cm³/min - *0.85 in³/min*	
Fluid		Mineral based oil	
Fluid temperature	*with NBR (BUNA-N) seals*	from -20°C to 80°C - *from -4°F to 176°F*	
	with FPM (VITON) seals	from -20°C to 100°C - *from -4°F to 212°F*	
Viscosity	*operating range*	from 15 to 75 mm²/s - *from 15 to 75 cSt*	
	min.	12 mm²s - *12 cSt*	
	max.	400 mm²s - *400 cSt*	
Max. contamination level		-/19/16 - ISO 4406 - *NAS 1638 - class 10*	
Ambient temperature for working conditions		from -20°C to 50°C - *from -4°F to 122°F*	

NOTE - For different conditions please contact Sales Dpt.

Standard threads

REFERENCE STANDARD		BSP	UN-UNF
THREAD ACCORDING TO		ISO 228/1	ISO 263
		BS 2779	ANSI B1.1 unified
CAVITY DIMENSION ACCORDING TO	ISO	1179	11926
	SAE		J11926
	DIN	3852-2 shape X or Y	

PORT THREADING	SDE030		SDE060			
			30 l/min *(7.9 US gpm)* sections		60 l/min *(15.8 US gpm)* sections	
	BSP	UN-UNF	BSP	UN-UNF	BSP	UN-UNF
Inlet **P** and outlet **T**	G 3/8	3/4-16 (SAE 8)	G 3/8	3/4-16 (SAE 8)	G 1/2	3/4-16 (SAE 8)
Working ports **A** and **B**	G 3/8	9/16-18 (SAE 6)	G 3/8	9/16-18 (SAE 6)	G 3/8	9/16-18 (SAE 6)
					G 1/2*	3/4-16 (SAE 8)*
Port **M**	G 1/4	9/16-18 (SAE 6)	G 1/4	7/16-20 (SAE 4) 9/16-18 (SAE 6)**	G 1/4	7/16-20 (SAE 4) 9/16-18 (SAE 6)**
Port **LS**	G 1/4	9/16-18 (SAE 6)	G 1/4	9/16-18 (SAE 6)	/	/

NOTE (*) Optional thread - (**) Only for type N inlet section

Dimensions

This drawing is referred to directional valve with 2 working sections and AN1 type inlet section.

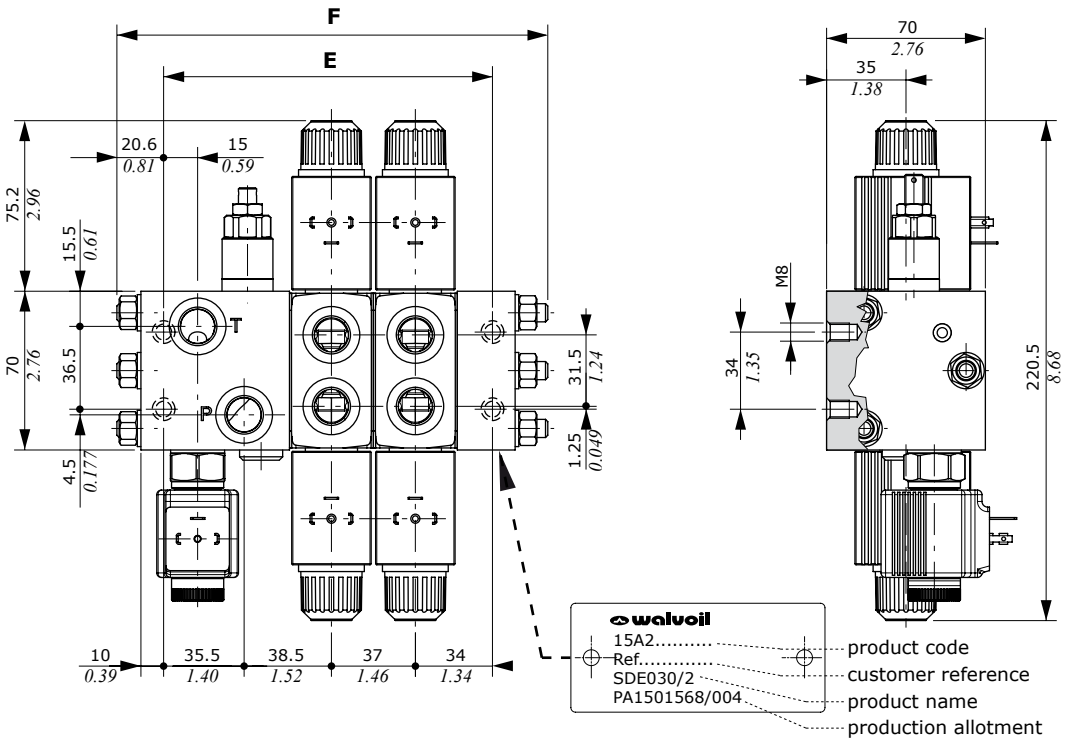

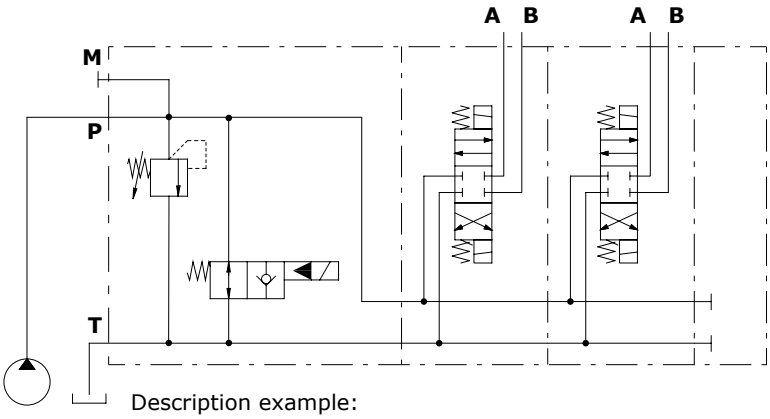

Description example:
SDE030/2/AN1(JNG3-120)ELN/Q-18ES3B/Q-18ES3B/RF-12VDC

TYPE	AN type inlet section				AN1 type inlet section (see drawing)						AN2-AN6-AN7 type inlet sections			
	E		F		E		F		Weight		E		F	
	mm	*in*	mm	*in*	mm	*in*	mm	*in*	Kg	*lb*	mm	*in*	mm	*in*
SDE030/1	71	*2.80*	116	*4.57*	108	*4.25*	153	*6.02*	3.80	*8.38*	108	*4.25*	153	*6.02*
SDE030/2	108	*4.25*	153	*6.02*	145	*5.71*	190	*7.48*	5.99	*13.21*	145	*5.71*	190	*7.48*
SDE030/3	145	*5.71*	190	*7.48*	182	*7.17*	227	*8.94*	8.10	*17.86*	182	*7.17*	227	*8.94*
SDE030/4	182	*7.17*	227	*8.94*	279	*10.98*	264	*10.39*	10.22	*22.53*	279	*8.62*	264	*10.39*
SDE030/5	219	*8.62*	264	*10.39*	256	*10.08*	301	*11.85*	12.33	*27.18*	256	*10.08*	301	*11.85*
SDE030/6	256	*10.08*	301	*11.85*	293	*11.54*	338	*13.31*	14.44	*31.83*	293	*11.54*	338	*13.31*
SDE030/7	293	*11.54*	338	*13.31*	330	*12.99*	375	*14.76*	16.56	*36.51*	330	*12.99*	375	*14.76*
SDE030/8	330	*12.99*	375	*14.76*	367	*14.45*	412	*16.22*	18.67	*41.16*	367	*14.45*	412	*16.22*
SDE030/9	367	*14.45*	412	*16.22*	404	*15.91*	449	*17.68*	20.78	*45.81*	404	*15.91*	449	*17.68*
SDE030/10	404	*15.91*	449	*17.68*	441	*17.36*	486	*19.13*	22.89	*50.46*	441	*17.36*	486	*19.13*

Complete section ordering codes

SDE030/4/ AN1(JNG3-120)ELN / Q-18ES3B / Q-18ES3B / QL-18ES3B /

Nr. of working sections

1 2 2 2

QBPE-18ES3B.BPEN(NC)3 / RF - ..... - 12VDC

2 3 4 5

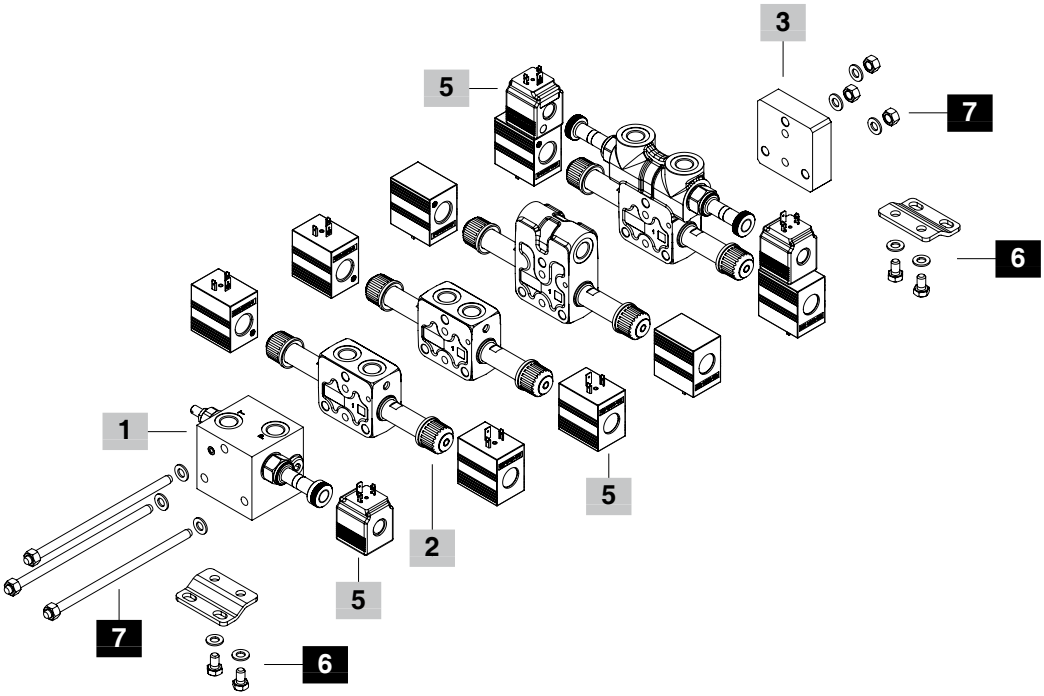

Complete section ordering codes

1 Complete inlet section * page 10

Section bodies are aluminium alloy made

TYPE: **AN** CODE: 6192G0000
DESCRIPTION: Without valves arrangement, P and T ports open
TYPE: **ANP** CODE: 6192G0001
DESCRIPTION: As AN, port P open and T plugged
TYPE: **ANT** CODE: 6192G0002
DESCRIPTION: As AN, port P plugged and T open
TYPE: **ANS** CODE: 6192G0003
DESCRIPTION: As AN, ports P and T plugged
TYPE: **AN1(JNG3-120)ELN-WC** CODE: Y61S3A3001
DESCRIPTION: Relief and unloader valves arrangement, P and T ports open
TYPE: **AN1P(JNG3-120)ELN-WC** CODE: Y61S3A3002
DESCRIPTION: As AN1, port P open and T plugged
TYPE: **AN2/PPXN1(JNG3-120)ELN-WC** CODE: Y61S3A3001
DESCRIPTION: Relief, unloader and flow control valves arrangement, P and T ports open
TYPE: **AN2P/PPXN1(JNG3-120)ELN-WC** CODE: Y61S3A3005
DESCRIPTION: As AN2, port P open and T plugged
TYPE: **AN6/EEXL1(VMP02TR-220)-SB10RC(C3)-WC**
CODE: Y61S3A3006
DESCRIPTION: With pressure relief valve and flow control valve, for Open Center circuit, compensator with 10 bar *(145 psi)* stand-by, P and T ports open
TYPE: **AN7/EEXN1(VMP02TR-200)-SB10RCV(C3)-WC**
CODE: Y61S3A3007
DESCRIPTION: As previous one, compensator with stand-by from 0 to 10 bar *(0 to 145 psi)* and handwheel actuation for Open to Closed Center switching, P and T ports open.

2 Complete working section * page 16

Section bodies are cast iron made

TYPE: **Q-18ES3B-WC** CODE: Y63S3A3001
DESCRIPTION: Parallel circuit, type 1 double acting spool
TYPE: **Q-28ES3B-WC** CODE: Y63S3A3006
DESCRIPTION: Parallel circuit, type 2 double acting spool
TYPE: **QBP-18ES3B.BPC3-WC** CODE: Y63S3A3002
DESCRIPTION: Parallel circuit, type 1 double acting spool, check valves on workports
TYPE: **QBPE-18ES3B.BPEN(NC)3-WC** CODE: Y63S3A3005
DESCRIPTION: Parallel circuit, type 1 double acting spool, solenoid operated check valves on workports
TYPE: **PFL3(150)-18ES3B-WC** CODE: Y63S3A3011
DESCRIPTION: Parallel circuit, type 1 double acting spool and side relief valve with 150 bar *(2175 psi)*
TYPE: **QL-18ES3B-WC** CODE: Y63S3A3004
DESCRIPTION: Parallel circuit, side workports, type 1 double acting spool
TYPE: **QBPL-18ES3B.BPA3-WC** CODE: Y63S3A3003
DESCRIPTION: As previous one with check valves on workports

3 Complete outlet section* page 25

Section bodies are aluminium alloy made

TYPE	CODE	DESCRIPTION
RF	3FIA203000	Without ports
RS	6193A1200	P and T ports plugged
RP	6193A3100	P port open and T port plugged
RT	6193A3000	T port open and P port plugged

4 Valve threading

Specify threading always when it is different from BSP standard (see page 4).

5 Coils page 56

Coils voltage specification; for list of available coils see pages of related sections

6 Fixing bracket page 59

TYPE	CODE	DESCRIPTION
STAF	5STA148065	Brackets with fixing screws

7 Assembling kit

CODE	DESCRIPTION	CODE	DESCRIPTION
Per distributore con fiancata d'ingresso tipo AN			
5TIR108116	For 1 section valve	5TIR108305	For 6 sections valve
5TIR108154	For 2 sections valve	5TIR108341	For 7 sections valve
5TIR108194	For 3 sections valve	5TIR108377	For 8 sections valve
5TIR108227	For 4 sections valve	5TIR108412	For 9 sections valve
5TIR108264	For 5 sections valve	5TIR108449	For 10 sections valve
Per distributore con fiancate d'ingresso tipo AN1-AN2-AN6-AN7			
5TIR108154	For 1 section valve	5TIR108341	For 6 sections valve
5TIR108194	For 2 sections valve	5TIR108377	For 7 sections valve
5TIR108227	For 3 sections valve	5TIR108412	For 8 sections valve
5TIR108264	For 4 sections valve	5TIR108449	For 9 sections valve
5TIR108305	For 5 sections valve	5TIR108486	For 10 sections valve

NOTE (*) – *Codes are referred to **BSP** thread.*

Inlet section: part ordering codes

SDE030/AN-....

1 6

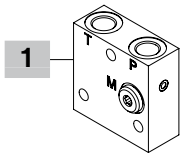

Valve setting (bar) Without coil

SDE030/AN1(JNG3-120)ELN-WC-....

1 2 3 6

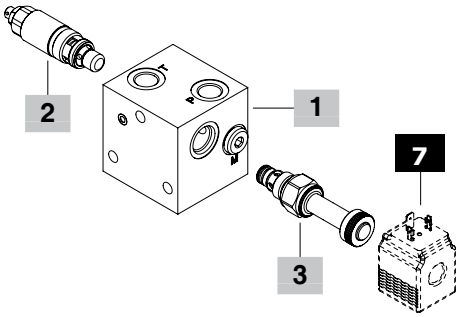

Valve setting (bar) Without coil

SDE030/AN2/PPXN1(JNG3-120)ELN-WC-....

1 4 2 3 6

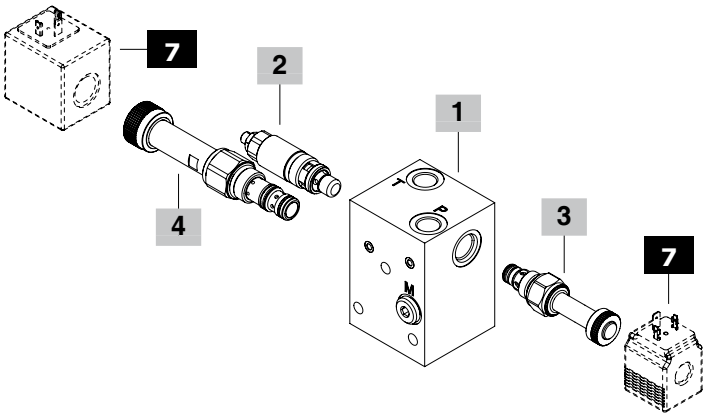

Valve setting (bar)

SDE030/AN6/EEXN1(VMP02TS-200)

1 4 2

SB10RCV(C3)-WC-....

5 Without coil 6

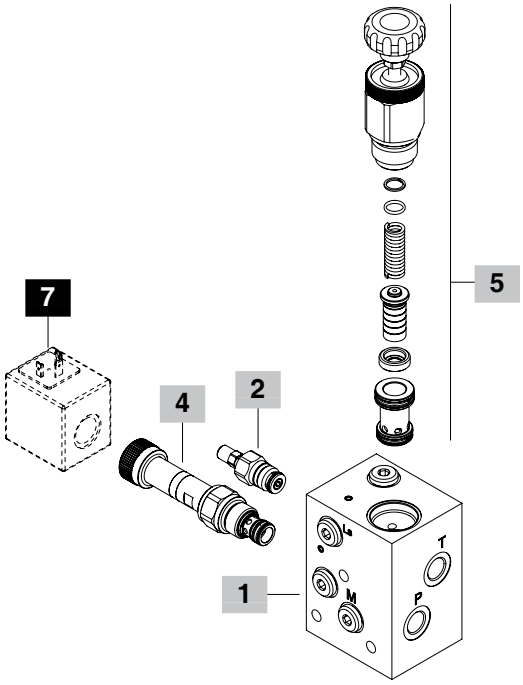

Inlet section: part ordering codes

1 Inlet section body kit * page 10

Section bodies are aluminium alloy made

TYPE	CODE	DESCRIPTION
AN	5FIA109303	Without valves arrangement, P and T ports open
ANP	5FIA109303PT	As AN, port P open and T plugged
ANT	5FIA109303PT	As AN, port P plugged and T open
ANS	5FIA109303S	As AN, ports P and T plugged
AN1	5FIA109300	Relief and unloader valves arrangement, P and T ports open
AN1P	5FIA109300P	As AN1, port P open and T plugged
AN2	5FIA109302	Relief, unloader and flow control valves arrangement, P and T open ports
AN2P	5FIA109302P	As AN2, port P open and T plugged
AN6	5FIA109301	For Open Center, relief and flow control valves arrangement, compensator, LS port plugged, P and T ports open
AN7	5FIA109304	As AN6, for Closed Center, with LS port open

2 Main relief valve page 18

TYPE	CODE	DESCRIPTION
For sections AN1-AN2 type		
Valve standard setting is referred to 10 l/min *(2.6 US gpm)* flow, considering the valve mounted on inlet section.		
(JNG2-63)	5KIT105512	Range 40-63 bar *(580-900 psi)* std setting 63 bar *(900 psi)*
(JNG3-120)	5KIT105513	Range 50-200 bar *(725-2900 psi)* std setting 120 bar *(1750 psi)*
(JNG4-220)	5KIT105514	Range 160-315 bar *(2300-4600 psi)* std setting 220 bar *(3200 psi)*
(JNH2-63)	5KIT105517	As type JNG2, set and locked
(JNH3-120)	5KIT105516	As type JNG3, set and locked
(JNH4-220)	5KIT105515	As type JNG4, set and locked
(JNZT2-63)	5KIT105562	As type JNG2, anti-tampering type
(JNZT3-120)	5KIT105563	As type JNG3, anti-tampering type
(JNZT4-220)	5KIT105564	As type JNG4, anti-tampering type
SV	XTAP623282	Relief valve blanking plug
For sections AN6-AN7 type		
Valve standard setting is referred to 1 l/min *(0.26 US gpm)* flow, considering the valve mounted on inlet section.		
(VMP02TV-50)	1100000100	Range 5-80 bar *(73-1160 psi)* std setting 50 bar *(725 psi)*
(VMP02TS-150)	1100000101	Range 50-220 bar *(725-3200 psi)* std setting 150 bar *(2200 psi)*
(VMP02TR-250)	1100000102	Range 180-350 bar *(2600-5100 psi)* std setting 250 bar *(3600 psi)*

3 Solenoid operated unloading valve page 14

TYPE	CODE	DESCRIPTION
For sections AN1-AN2 type		
ELN	0EC08002031	Without emergency actuation
ELV	0EC08002034	With screw type emergency actuation
ELP	0EC08002033	With push-button emergency actuation
ELT	0EC08002035	With "twist & push" emergency actuation
LT	XTAP510320	Unloading valve blanking plug

4 Flow control valve page 14

TYPE	CODE	DESCRIPTION
For sections AN1-AN2 type		
PPAL1	0PP10002000	Hand-wheel setting type
PPAV1	0PP10002005	Screw setting type
PPXN1	0PP10002031	Solenoid operated, without emergency
PPXV1	0PP10002033	Solenoid operated, screw emergency
PPXL1	0PP10002035	Solenoid operated, hand-wheel emergency
LT	3XTP3545700	Flow control valve blanking plug
For sections AN6-AN7 type		
EEXN1	0EE10002009	Solenoid operated, without emergency
EEXL1	0EE10002008	Solenoid operated, hand-wheel emergency

5 Compensator kit page 15

TYPE	CODE	DESCRIPTION
For section AN6 type		
SB10RCV(C3)	5KT6200227	With 10 bar *(145 psi)* stand-by, hand-wheel actuation for Open Center to Closed Center switching
SB10RC(C3)	5KT6200222	With 10 bar *(145 psi)* stand-by, for Open Center circuit
For section AN7 type		
CL	X451810000	Compensator blanking plug, for Closed Center circuit

6 Section threading

Specify threading always when it is different from BSP standard (see page 4).

7 Optional coil pag. 56

For list of available coils see pages of related section.

NOTE (*) – *Codes are referred to **BSP** thread.*

Inlet section: dimension and hydraulic circuit

AN inlet sections

AN type
with P and T ports open

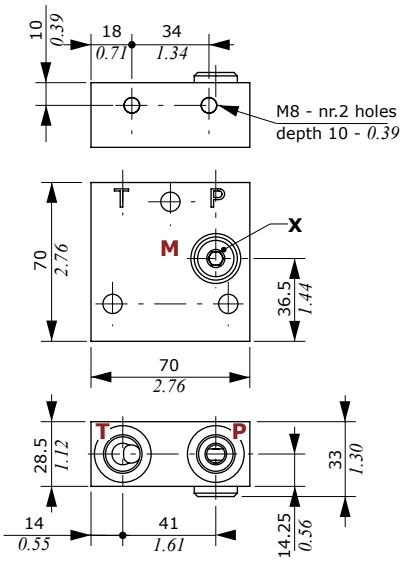

AN type
P and T ports open

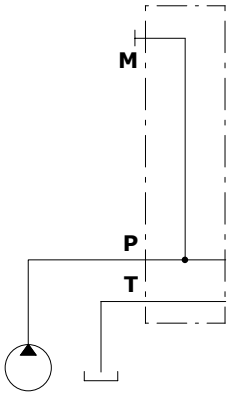

ANP type
P port open and
T port plugged

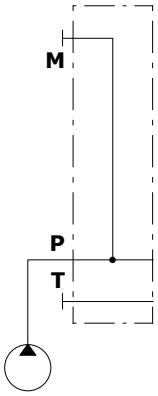

ANT type
P port plugged
and T port open

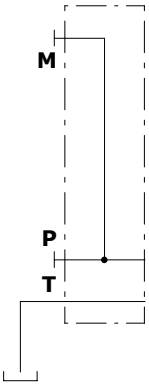

ANS type
P and T ports
plugged

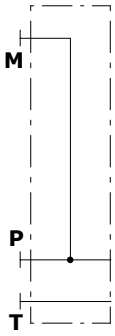

Wrenches and tightening torque
X = allen wrench 6 - 24 Nm *(17.7 lbft)*

AN1 inlet sections

AN1 type with P and T ports open

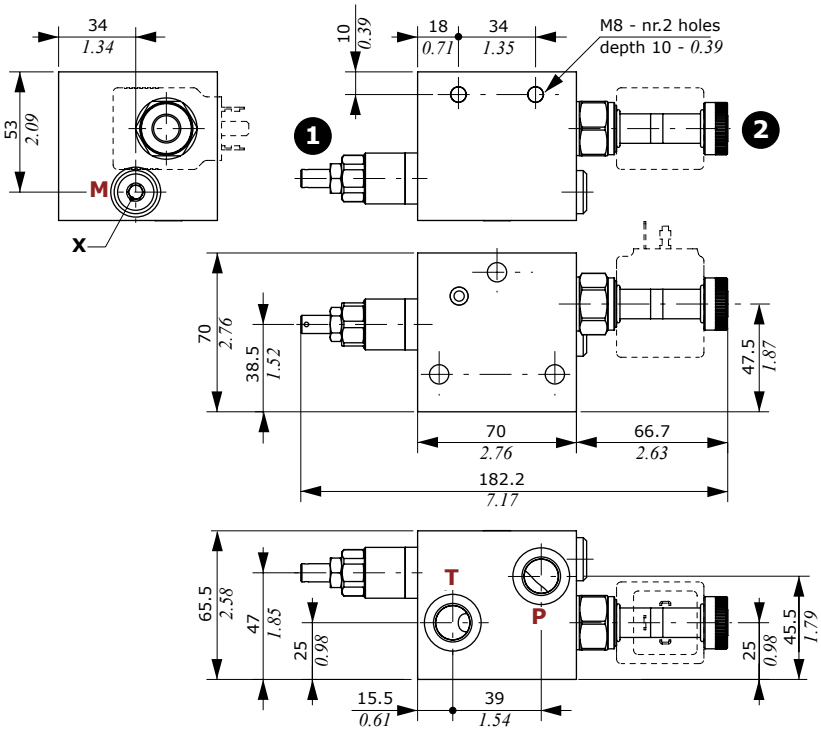

AN1 types
P and T ports open

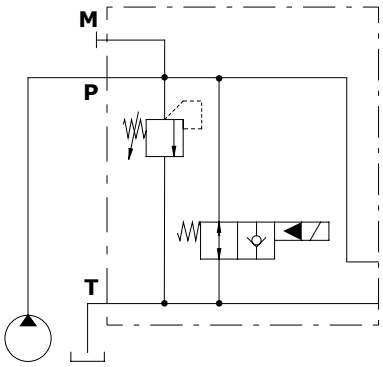

AN1P types
P port open and T port plugged

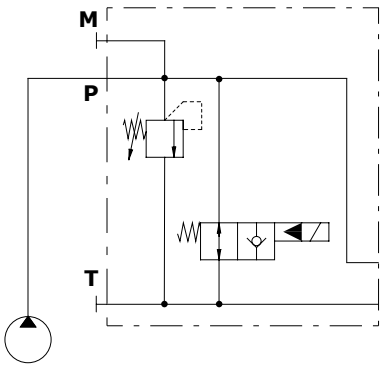

Wrenches and tightening torque
X = allen wrench 6 - 24 Nm *(17.7 lbft)*
NOTE: for valve wrench and torque see pages 13 and 14.

Legenda
1: Pressure relief valve
2: Solenoid operated unloading valve

Inlet section: dimension and hydraulic circuit

AN2 inlet sections

AN2 type with P and T ports open

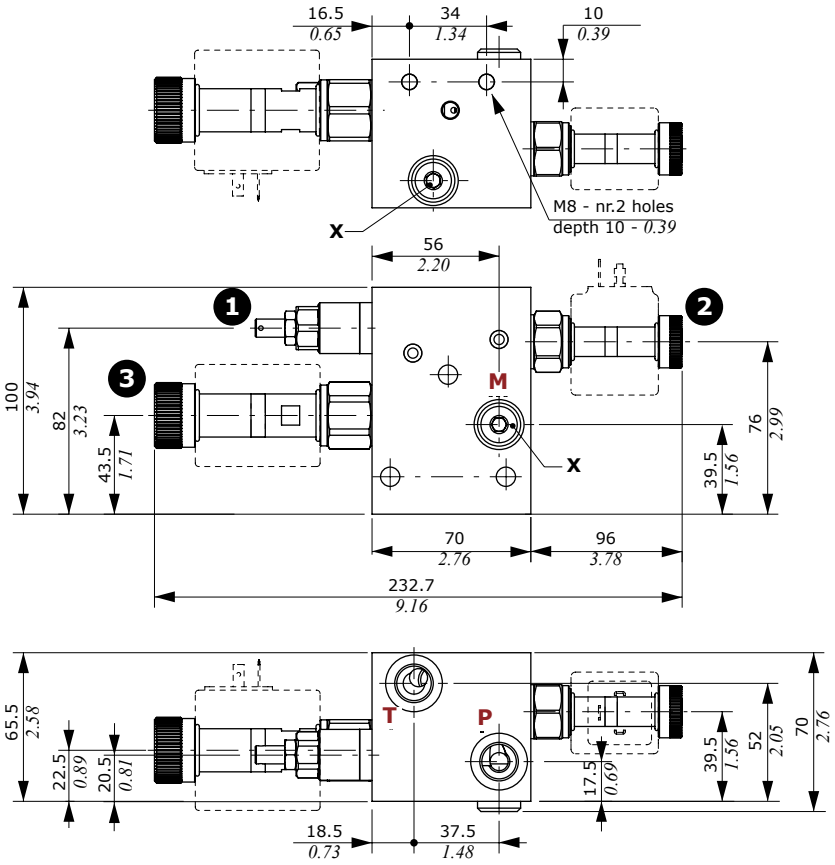

AN2 types

P and T ports open

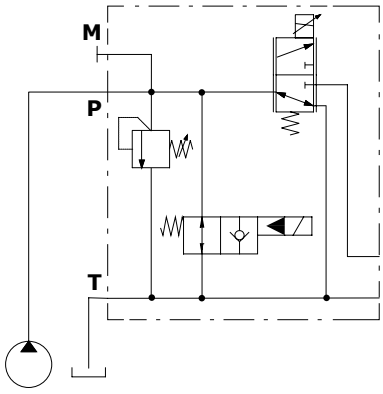

AN2P types

P port open and T port plugged

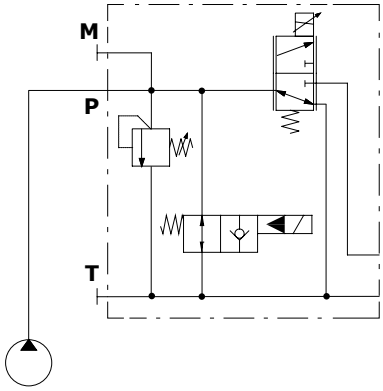

Legenda

1: Pressure relief valve
2: Solenoid operated unloading valve
3: Pressure compensated flow control valve

Wrenches and tightening torque

X = allen wrench 6 - 24 Nm *(17.7 lbft)*
NOTE: for valve wrench and torque see pages 13, 14.

Inlet section: dimension and hydraulic circuit

AN6-AN7 inlet sections

AN6 type; configuration for Open and Closed Center

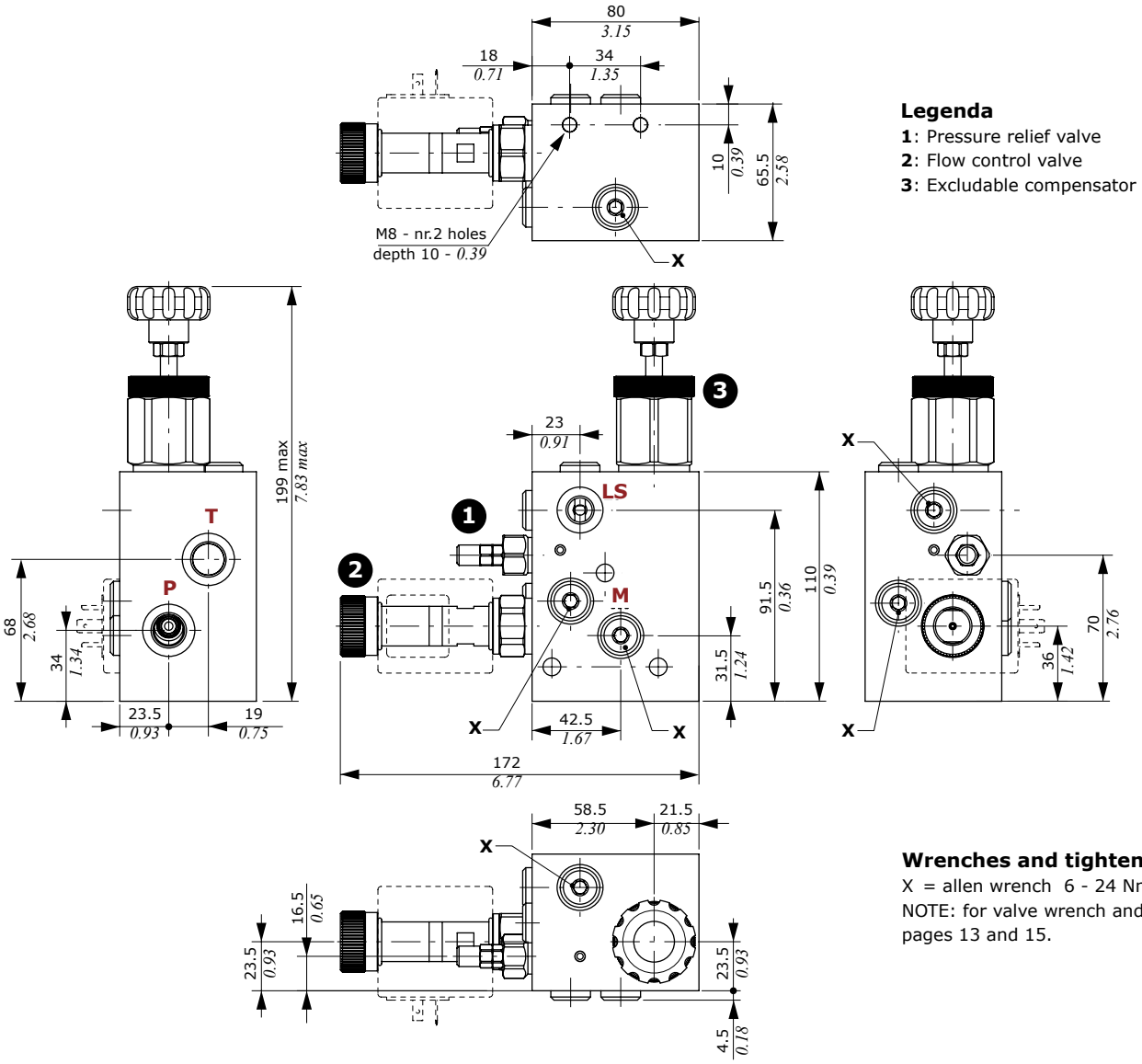

Legenda

1: Pressure relief valve
2: Flow control valve
3: Excludable compensator

Wrenches and tightening torque

X = allen wrench 6 - 24 Nm *(17.7 lbft)*
NOTE: for valve wrench and torque see pages 13 and 15.

AN6 type
for Open Center circuit

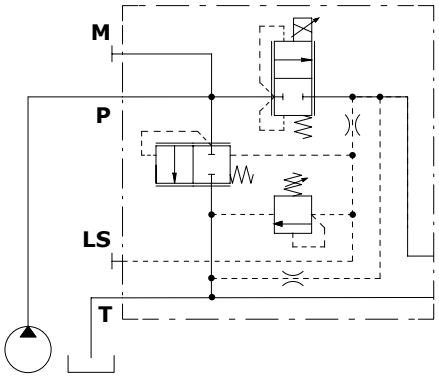

AN6 type
for Closed and Open Center circuits

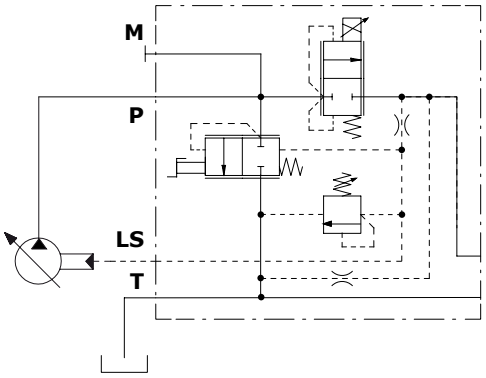

AN7 type
for Closed Center circuit

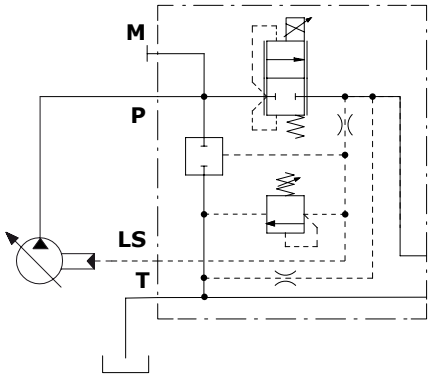

Inlet section: options

Main relief valve

For sections AN1 and AN2 type

Setting types

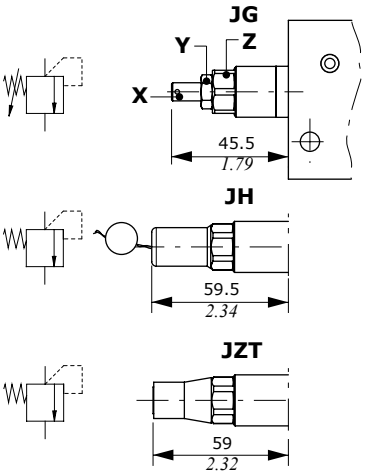

Setting range: JNG2 type

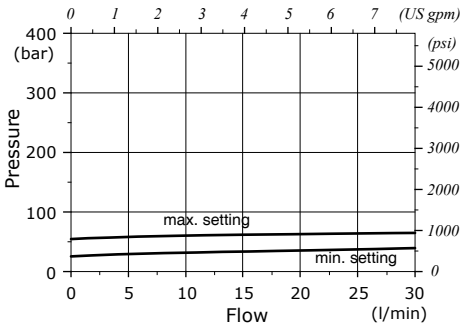

Setting range: JNG3 type

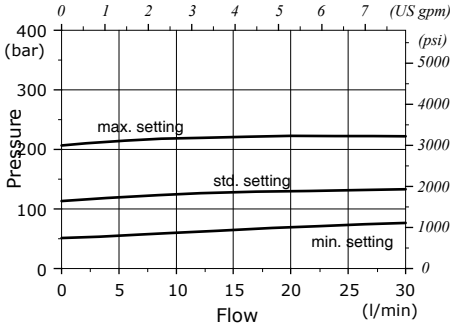

Setting range: JNG4 type

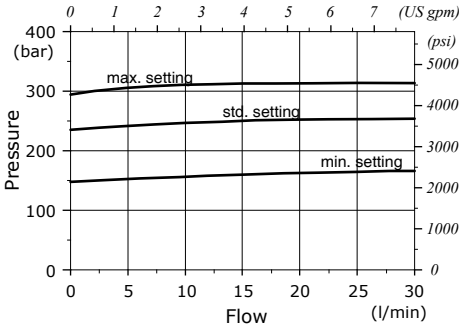

Legenda
JG: screw setting type
JH: valve set and locked
(cap code 3COP117260)
JZT: valve set and locked
(cap code 4COP120420)

Wrenches and tightening torque
X = allen wrench 4
Y = wrench 13 - 24 Nm *(17.7 lbft)*
Z = wrench 19 - 24 Nm *(17.7 lbft)*

For sections AN6 and AN7 type

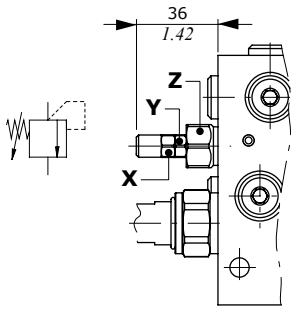

Setting range: VMP02TV type

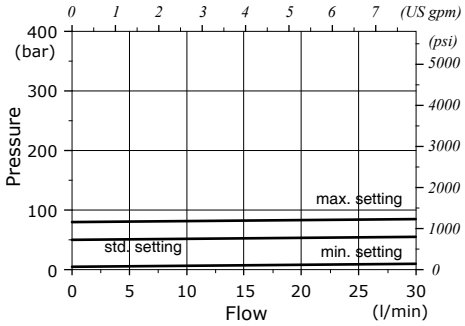

Setting range: VMP02TS type

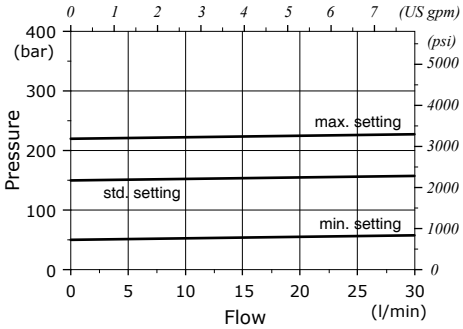

Wrenches and tightening torque
X = wrench 10
Y = wrench 10 - 6.6 Nm *(4.9 lbft)*
Z = wrench 19 - 24 Nm *(17.7 lbft)*

Setting range: VMP02TR type

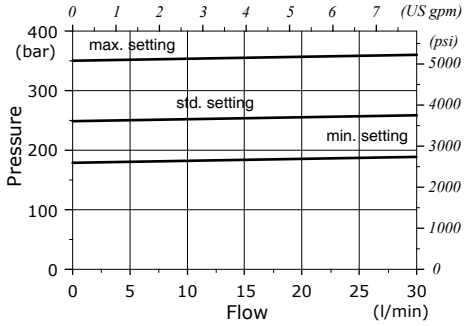

Inlet section: options

Unloading valve

For sections AN1 and AN2 type

Manual emergency actuation types

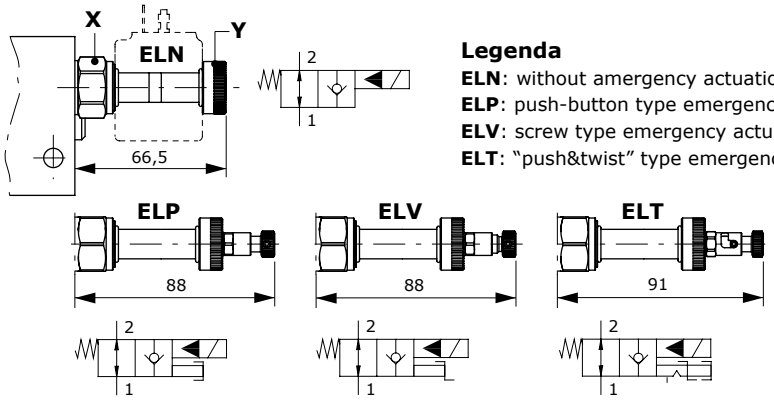

Legenda
ELN: without amergency actuation
ELP: push-button type emergency actuation
ELV: screw type emergency actuation
ELT: "push&twist" type emergency actuation

Pressure drop diagram

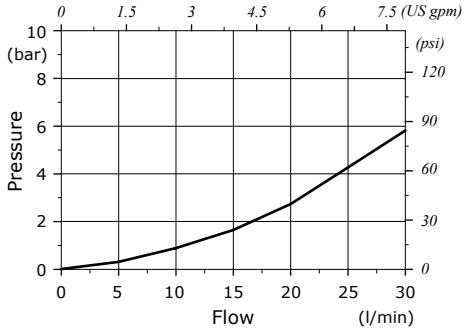

Wrenches and tightening torque
X = wrench 24 - 30 Nm *(22 lbft)*
Y = 5 Nm *(3.7 lbft)*

Features
Max. flow . . . . . : 40 l/min *(10.6 US gpm)*
Max. pressure. . . . . : 380 bar *(5500 psi)*
Internal leakage . . . . . : 0.25 cm³/min @ 210 bar
(0.015 in3/min @ 3050 psi)
For coil features and options see **BER** coil on pages 56 and 57.

Pressure compensated flow control valve

For section AN2 type

Manual operated **Solenoid operated**

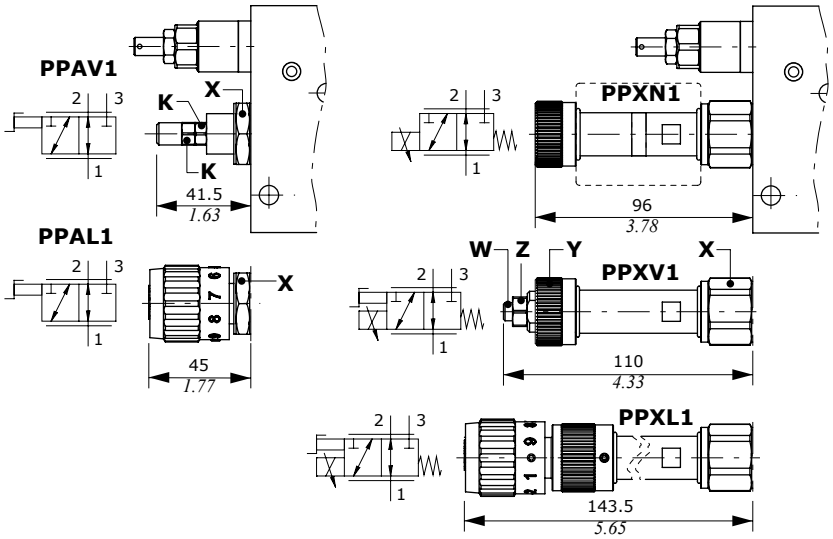

Flow regulation diagram

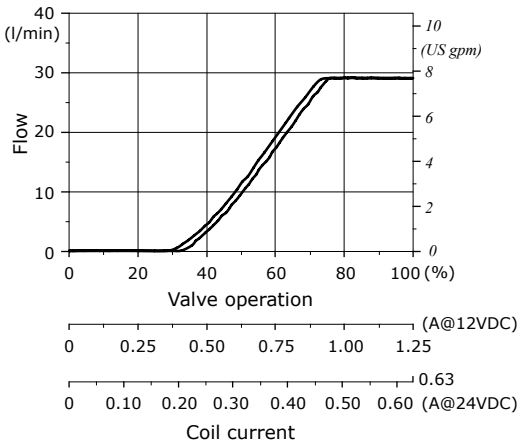

Legenda
PPAV1: screw setting type
PPAL1: hand-wheel setting type
PPXN1: without emergency actuation
PPXV1: screw type emergency actuation
PPXL1: hand-wheel emergency actuation

Wrenches and tightening torque
K = wrench 10 - 6.6 Nm *(4.9 lbft)*
X = wrench 27 - 50 Nm *(37 lbft)*
Y = 5 Nm *(3.7 lbft)*
W = allen wrench 4
Z = wrench 8 - 15 Nm *(11 lbft)*

Features
Max. inlet flow . . . . . : 50 l/min *(13.2 US gpm)*
Max. regulated flow. . . . . : 30 l/min *(7.9 US gpm)*
Inlet flow (PPX types) . . . . . : regulated flow +5%
Max. pressure. . . . . : 350 bar *(5100 psi)* - PPA types / 315 bar *(4600 psi)* - PPX types
Internal leakage (PPX types) : 150 cm³/min @ 210 bar *(9.1 in³/min @ 3050 psi)*
For coil features and options see **BQP19** or **BH** coils on pages 56 and 57.

Flow vs. Pressure diagram

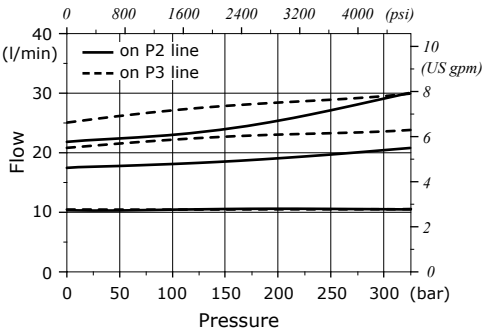

Inlet section: options

Pressure compensated flow control valve

For sections AN6-AN7 type

Curves are measured using the standard compensator mounted on section, with 10 bar *(145 psi)* stand-by.

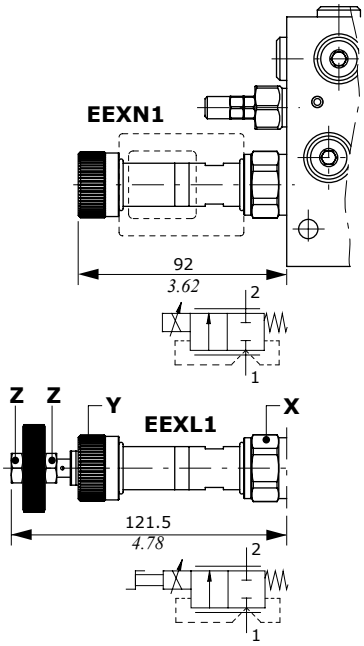

Flow regulation diagram

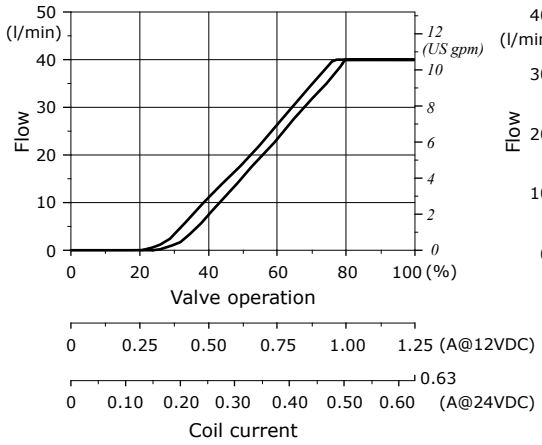

Flow vs. Pressure diagram

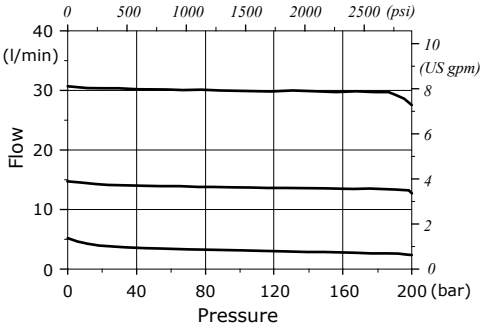

Legenda

EEXN1: without emergency actuation
EEXL1: hand-wheel emergency actuation

Wrenches and tightening torque

K = wrench 10 - 6.6 Nm *(4.9 lbft)*
X = wrench 27 - 50 Nm *(37 lbft)*
Y = 5 Nm *(3.7 lbft)*
Z = wrench 13 - 9.8 Nm *(7.2 lbft)*

Features

Max. flow . . . . . .: 40 l/min *(10.6 US gpm)*
Max. pressure. . . . . .: 300 bar *(5500 psi)*
Internal leakages . . . . . .: 150 cm³/min @ 150 bar
(9.1 in³/min @ 2175 psi)

For coil features and options see **BQP19** or **BH** coils on pages 56 and 57.

Compensator kit

For sections AN6-AN7 type

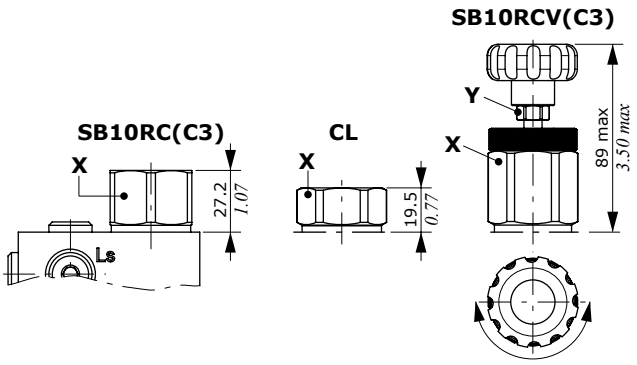

Legenda

SB10RC(C3): compensator with 10 bar *(145 psi)* stand-by, for Open Center circuit
CL: compensator blanking plug, for Closed Center circuit
SB10RCV(C3): compensator with 10 bar *(145 psi)* stand-by, hand-wheel actuation for Open Center to Closed Center circuit switching

Wrenches and tightening torque

X = wrench 36 - 42 Nm *(31 lbft)*
Y = wrench 13 - 6.6 Nm *(4.9 lbft)*

Working section: part ordering codes

Valve setting (bar)

SDE030/P - 1 8ES3B.P3(G3-100) - WC - .....

1 2 3 3 without coil 7

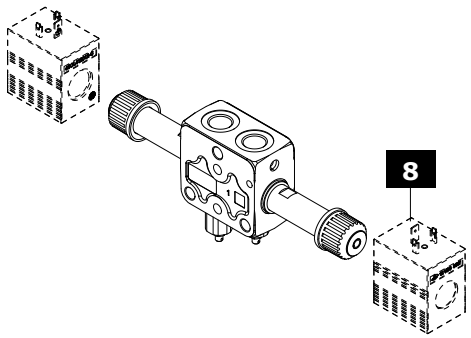

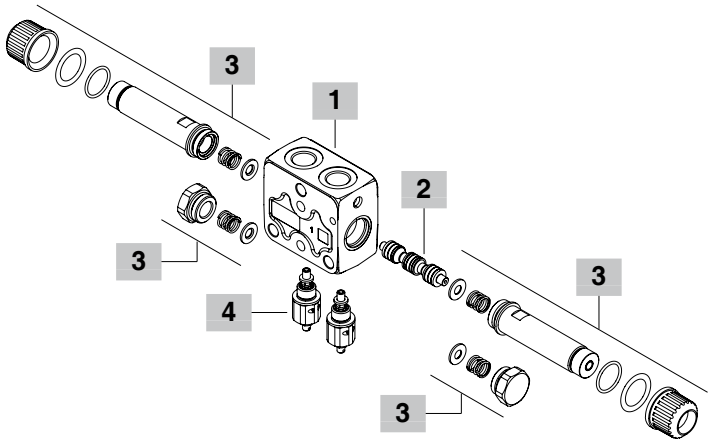

valve on port A - **1**
valve on port B - **2**
valve on ports A and B - **3**

SDE030/QBPL - 1 8ES3B.BPA 3 - WC - .....

1 2 3 6 without coil 7

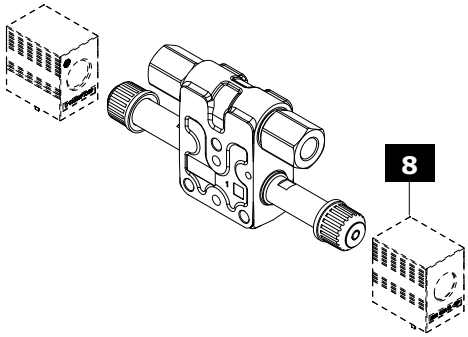

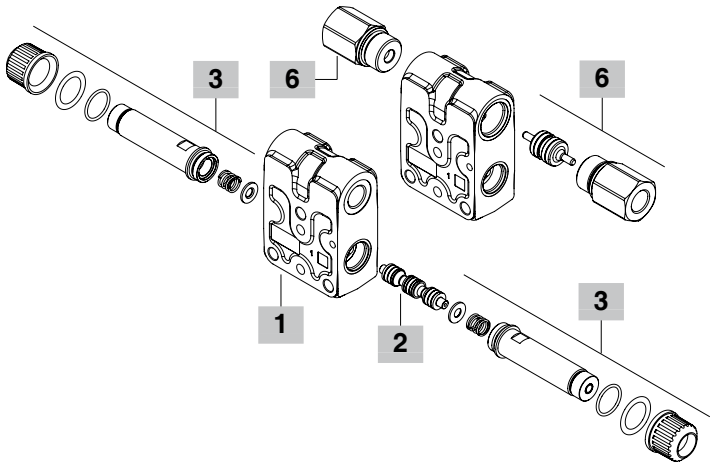

valve on port A - **1**
valve on port B - **2**
valve on ports A and B - **3**

SDE030/QBPE - 1 8ES3B.QBPEN3(NC) - WC - .....

1 2 3 6 without coil 7

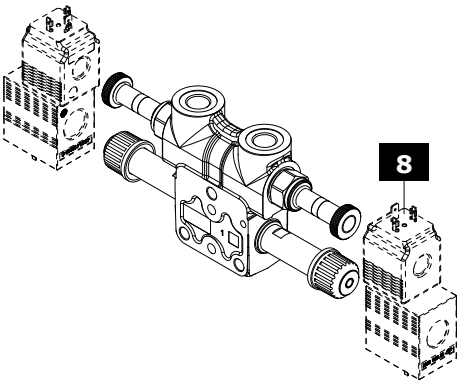

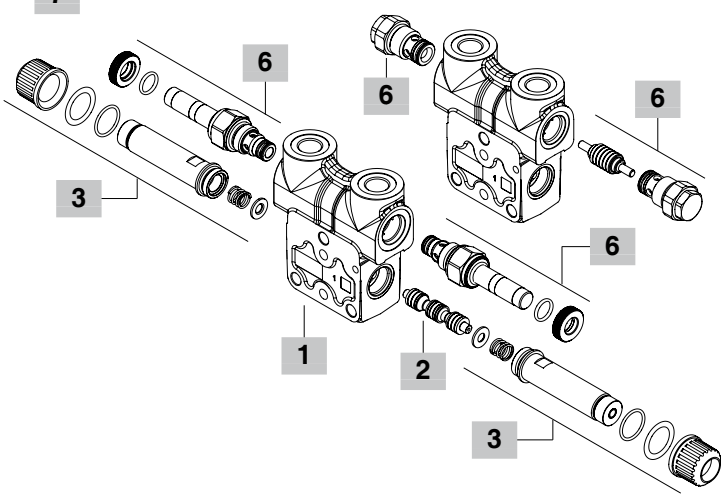

Working section: part ordering codes

Valve setting (bar)

SDE030/PFL 3(150) - 1 8ES3B - WC - .....

1 5 2 3 without coil 7

1 - valve on port A
2 - valve on port B
3 - valve on ports A and B

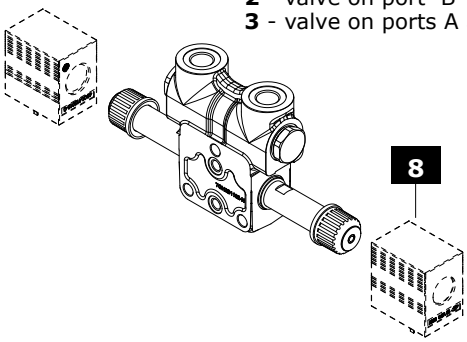

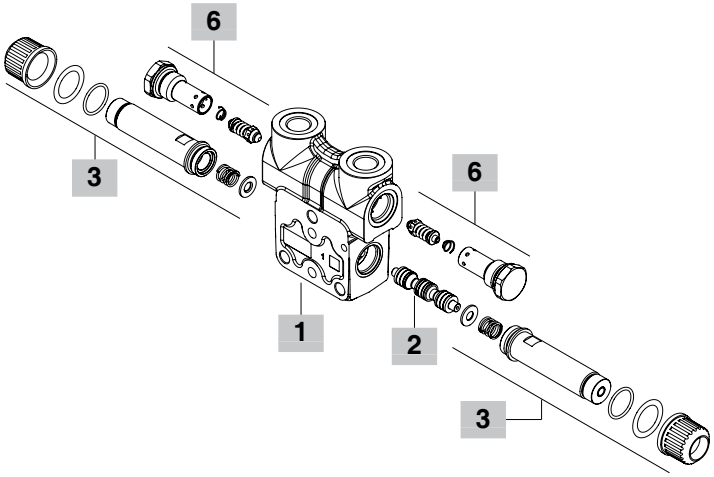

1 Working section body kit * page 18

Section bodies are cast iron made

TYPE	CODE	DESCRIPTION
Working sections with upper ports		
Q	5EL1093000	Parallel type
P	5EL1093005	As type Q, lower port relief valve arrangement
QBP	5EL1093003	As type Q with check valve arrangement
QBPE	5EL1093004	As type Q with solenoid operated check valve arrangement
PFL	5EL1093006	As type Q, side port relief valve arrangement
Working sections with side ports		
QL	5EL1093002	Parallel type,
QBPL	5EL1093001	As type QL with check valve arrangement

2 Spool page 20

TYPE	CODE	DESCRIPTION
For ON/OFF solenoid control		
1	3CU9010102	Double acting, A and B closed in neutral pos.
1A	3CU9010103	Double acting, A to tank in neutral pos. For connect B to tank (type **1B**) is necessary to turn the spool
2	3CU9025100	Double acting, A and B to tank in neutral pos.
2H	3CU9025225	Double acting, A and B partially to tank in neutral position
For ON/OFF solenoid control with emergency lever operation		
1LHD	3CU9010300	As type 1
1ALHD	3CU9010303	As type 1A
2LHD	3CU9020300	As type 2
2HLHD	3CU9020310	As type 2H

3 On/off solenoid control page 21

TYPE	CODE	DESCRIPTION
8ES1B	5CAN08E114C	Single acting on port A
8ES2B	5CAN08E114C	Single acting on port B
8ES3B	5CAN08E115C	Double acting
8ES3BLHD	5CAN08E315	Double acting with emergency lever operation: **needs dedicated spools**

4 Lower port relief valves page 22

Standard setting is referred to 10 l/min *(2.6 US gpm)* flow.

TYPE	CODE	DESCRIPTION
P(G3-100)	5KIT060000	From 50 to 200 bar *(725 to 2900 psi)*, standard setting 100 bar *(1450 psi)*
P(G4-200)	5KIT060001	From 200 to 315 bar *(2900 to 4600 psi)*, standard setting 200 bar *(2900 psi)*
P3T	5KIT060100	A and B ports valve blanking plugs

5 Side port relief valve page 22

The codes are referred to parts with FPM o-ring seals

TYPE	CODE	DESCRIPTION
PT	5TAP324460	Valve blanking plug

Fixed setting antishock valves:
setting is referred to 10 l/min *(2.6 US gpm)*

TYPE: **P 100** (setting (bar)) CODE: 5KIT308 100 A (setting (bar))

SETTING:

40 bar *(580 psi)*	50 bar *(725 psi)*	60 bar *(870 psi)*
80 bar *(1150 psi)*	100 bar *(1450 psi)*	120 bar *(1750 psi)*
130 bar *(1900 psi)*	140 bar *(2050 psi)*	150 bar *(2150 psi)*
165 bar *(2400 psi)*	175 bar *(2550 psi)*	185 bar *(2700 psi)*
200 bar *(2900 psi)*	210 bar *(3050 psi)*	220 bar *(3200 psi)*
235 bar *(3400 psi)*	250 bar *(3600 psi)*	

6 Check valve page 23

TYPE	CODE	DESCRIPTION
For arranged setions with upper ports, QBP type		
BPC3	5KIT430030	Valves kit for A and B ports
BPC1-BPC2	5KIT430012	Valve kit por single port
For arranged setions with upper ports, QBPE type		
TBP	3XTAP822150	Valve blanking plug
Normally closed circuit (NC)		
BPEN(NC)	0EC08002032	Without manual emergency
BPEV(NC)	0EC08002037	With screw type emergency
BPEP(NC)	0EC08002036	With pull-button emergency
BPET(NC)	0EC08002038	With "pull & twist" emergency
Normally open circuit (NO)		
BPEN(NA)	0EC08002031	Without manual emergency
BPEV(NA)	0EC08002034	With screw type emergency
BPEP(NA)	0EC08002033	With push-button emergency
BPET(NA)	0EC08002035	With "push & twist" emergency
For arranged setions with side ports, QBPL type		
BP3A	5KIT430130	Valves kit for A and B ports
BPA1-BPA2	5KIT430112	Valve kit for single port

7 Section threading

Specify threading always when it is different from BSP standard (see page 4).

8 Optional coils page 56

For list of available coils see pages of related section.

NOTE (*) – *Codes are referred to **BSP** thread.*

Working section

Dimension and hydraulic circuit

Working section Q type with upper ports

Q type

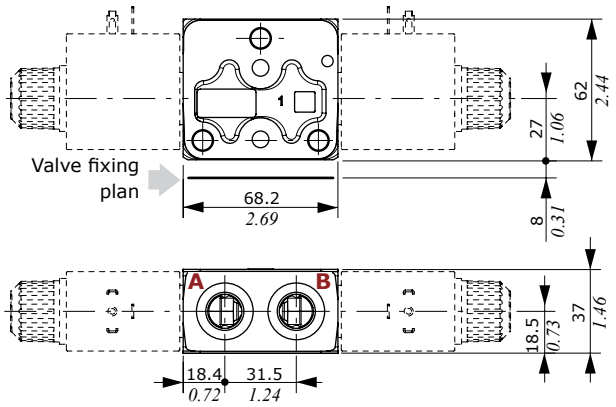

P type
with lower port relief valves arrangement

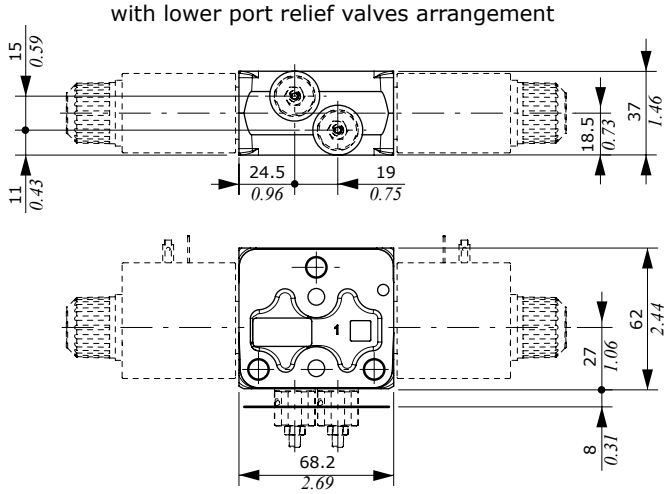

Flow through pressure drop

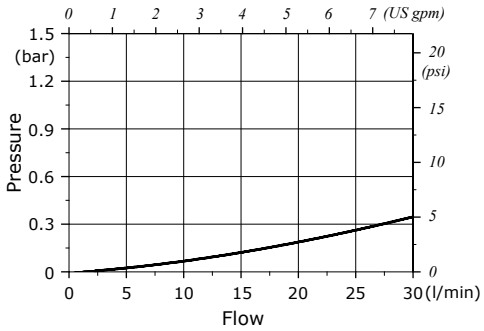

Q type example
(with spool 1)

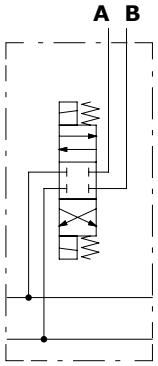

P type example
(with spool 1)

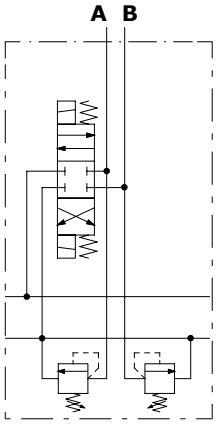

PFL type
with side port relief valves arrangement

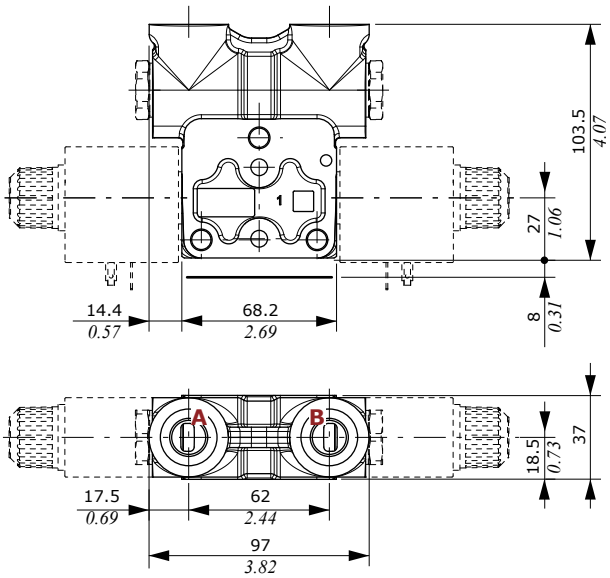

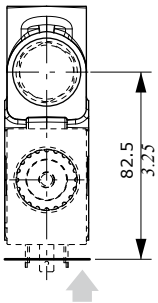

Valve fixing plan

PFL type example
(with spool 1)

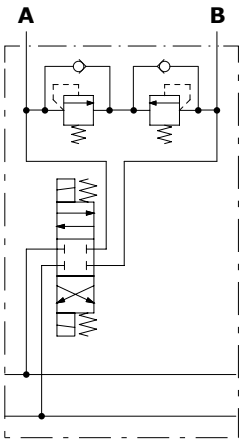

Working section

Spools

Working section with upper ports

QBP - QBPE types
with check valve arrangement

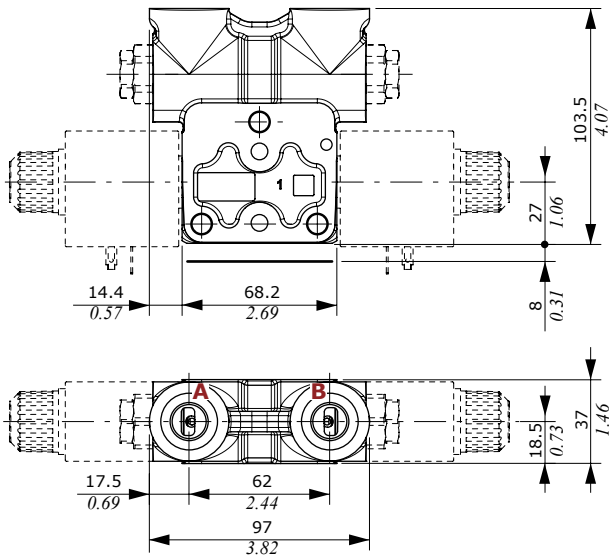

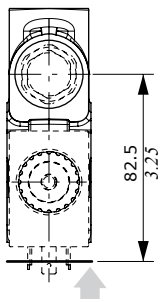

Valve fixing plan

QBP type example
(with spool 1)

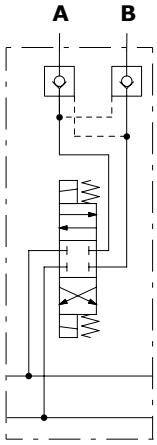

Working section with side ports

QL - QBPL types
with or without check valves arrangement

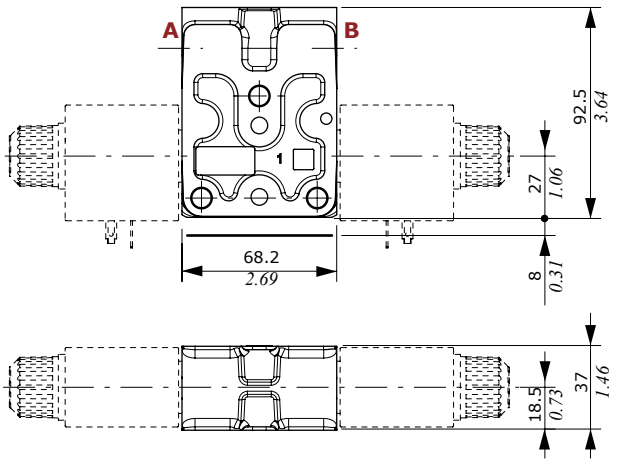

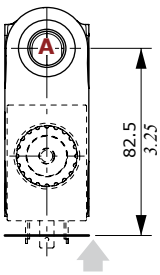

Valve fixing plan

QBPL type example
(with spool 1)

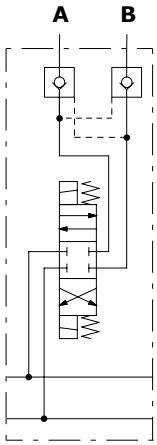

Working section

Spool

Types 1-1LHD
Double acting, A and B closed in neutral position

1 **0** 2

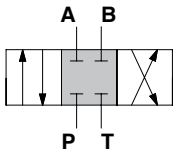

Stroke
position 1: + 3 mm *(+ 0.12 in)*
position 2: - 3 mm *(- 0.12 in)*

Types 1A-1ALHD
Double acting, A to tank in neutral position

1 **0** 2

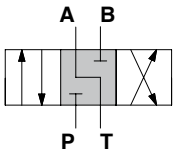

Stroke
position 1: + 3 mm *(+ 0.12 in)*
position 2: - 3 mm *(- 0.12 in)*

Types 2-2LHD
Double acting, A and B to tank in neutral position

1 **0** 2

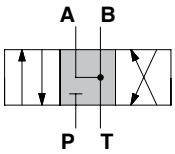

Stroke
position 1: + 3 mm *(+ 0.12 in)*
position 2: - 3 mm *(- 0.12 in)*

P⇒port - port⇒T pressure drops
(curves are matched)

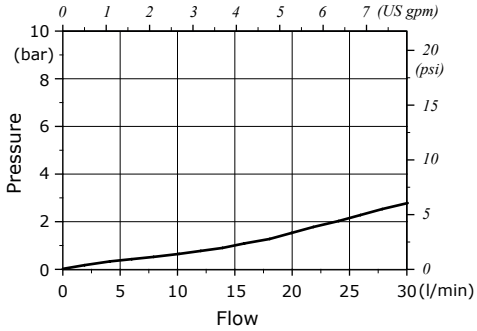

P⇒port - port⇒T pressure drops
(curves are matched)

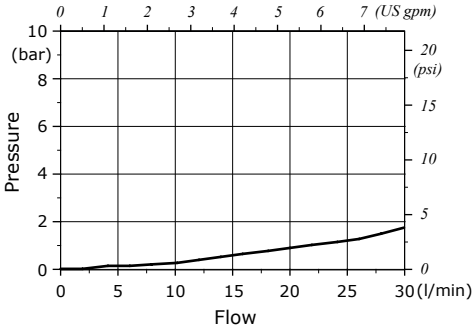

Types 2H-2HLHD
Double acting, A and B partially to tank in neutral position

1 **0** 2

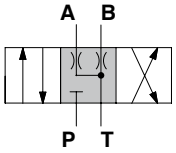

Stroke
position 1: + 3 mm *(+ 0.12 in)*
position 2: - 3 mm *(- 0.12 in)*

P⇒port - port⇒T pressure drops
(curves are matched)

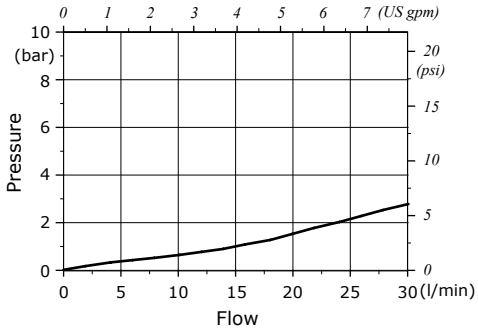

Working section

On/off solenoid control: 8ES3B - 8ES1B - 8ES2B types

When the section is configurated with check valves, the coils on control must be rotated 180°.

8ES3B: double acting control kit

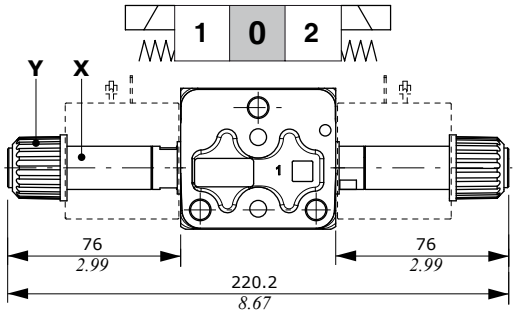

8ES1B: single acting on A control kit

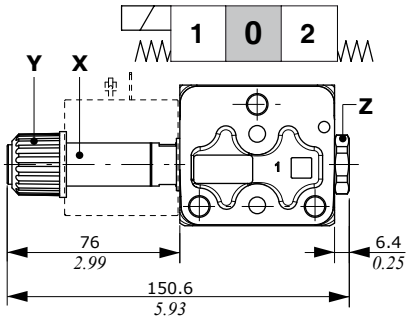

Operating condition
(stroke 3 mm - *0.12 in*)

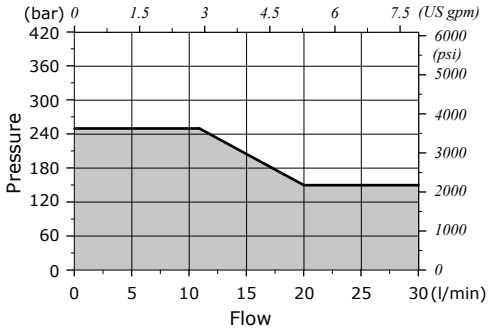

Wrenches and tightening torque

X = wrench 17 - 24 Nm *(17.7 lbft)*
Y = 6.6 Nm *(4.9 lbft)*
Z = wrench 24 - 24 Nm *(17.7 lbft)*

For coil features and options see **D12C** coil on pages 56 and 58.

8ES2B: single acting on B control kit

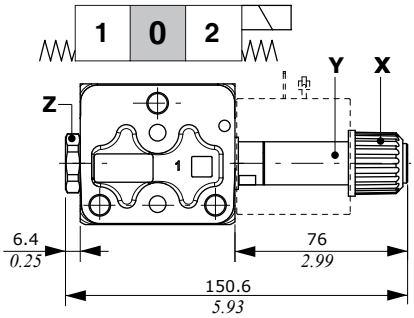

On/off solenoid control with lever: 8ES3BLHD type

When the section is configured with side ports or with check valves, control and coils must be rotated 180°.
If the section is configured with solenoid check valves the control can't be used.
The control needs dedicated spools: see page 17 for list.
IMPORTANT: lever to be used only for emergency operation, not for continuative use.

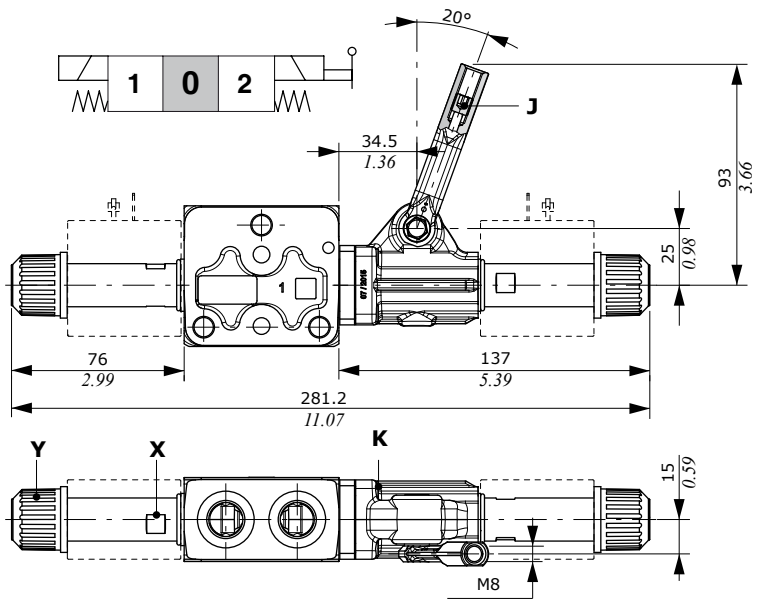

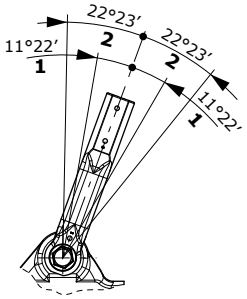

1: idle stroke angles
2: total operation angles

Wrenches and tightening torque

J = wrench 4 - 9.8 Nm *(7.2 lbft)*
K = allen wrench 4 - 6.6 Nm *(4.9 lbft)*
X = wrench 17 - 24 Nm *(17.7 lbft)*
Y = 6.6 Nm *(4.9 lbft)*

Control features

Max. back pressure on T .: 30 bar *(435 psi)*
For coil features and options see **D12C** coil on pages 56 and 8.

Working section

Lower port relief valves

G type

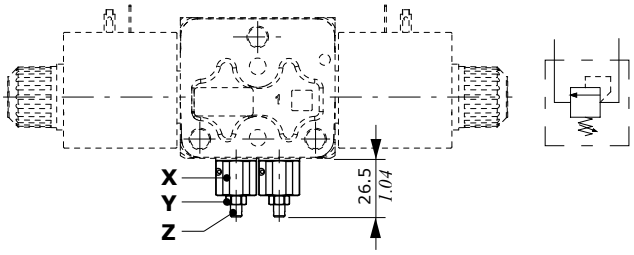

H type

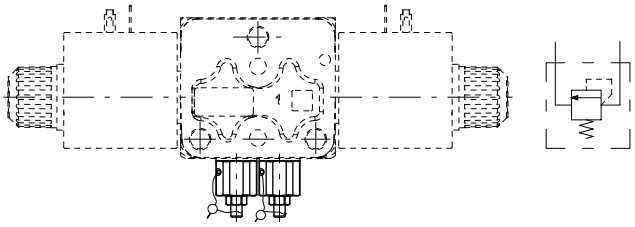

Setting range: G3 type

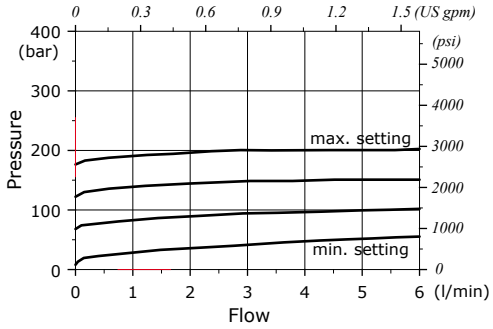

Setting range: G4 type

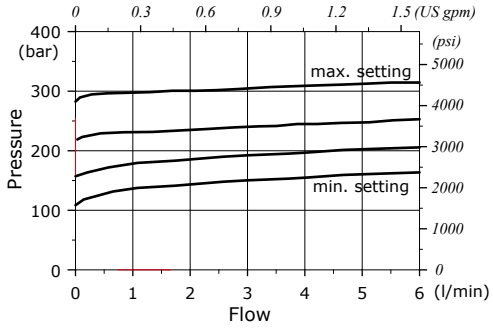

Legenda

G: screw setting type
H: valve set and locked

Wrenches and tightening torque

X = wrench 17 - 24 Nm *(17.7 lbft)*
Y = wrench 8 - 6.6 Nm *(4.9 lbft)*
Z = allen wrench 2.5

Side port relief valves

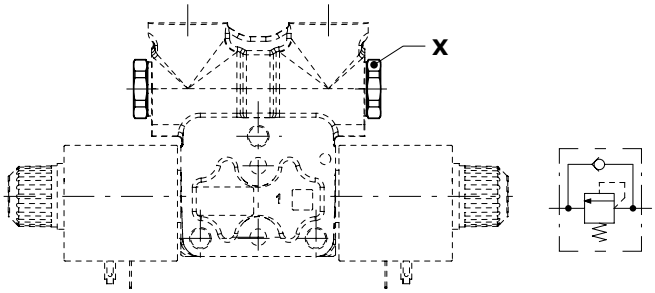

Wrenches and tightening torque

X = wrench 24 - 42 Nm *(31 lbft)*

Pressure drop
(working section included

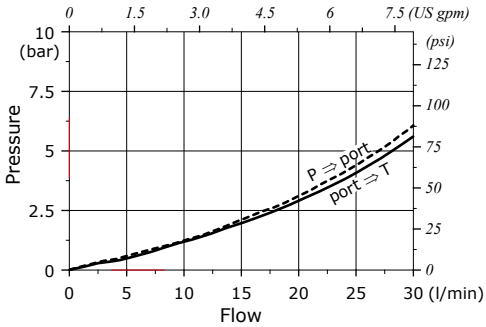

Setting example
(10 l/min - *2.6 US gpm*)

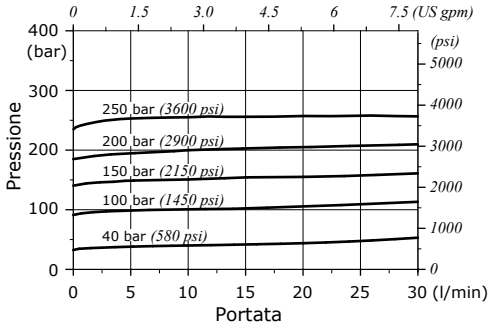

Check valves

When the section is configurated with check valves, the coils on control must be rotated 180°.

For sections with upper ports

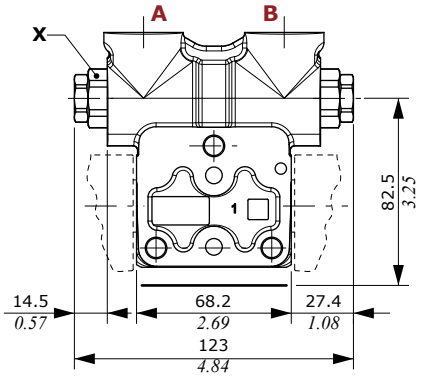

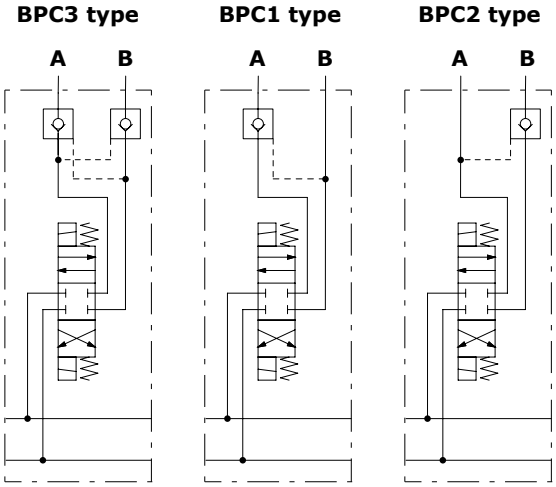

Wrenches and tightening torque

X = wrench 24 - 42 Nm *(31 lbft)*

Parts ordering codes

TYPE	CODE	DESCRIPTION
BP	1300020402	Check valve
TBP	XTAP627260	Valve blanking plug
-	3PIS214480	Piston

Pressure drop diagram

(working section included)

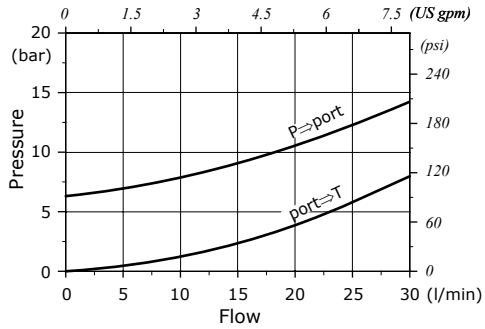

For sections with side ports

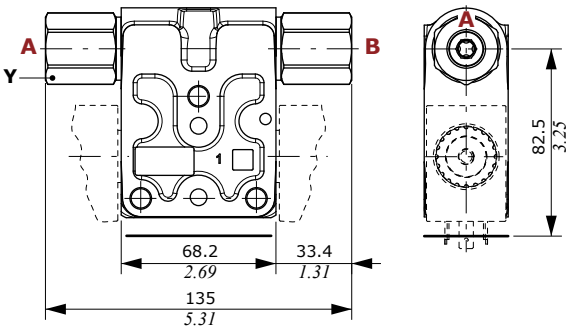

Pressure drop diagram

(working section included)

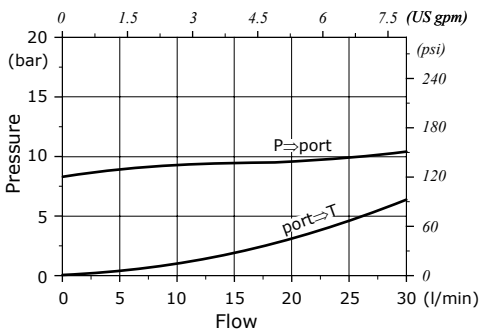

BPA3 type

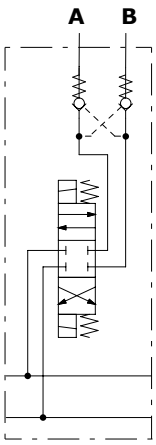

Wrenches and tightening torque

X = wrench 28 - 50 Nm *(37 lbft)*

Parts ordering codes

TYPE	CODE	DESCRIPTION
BPA	3XCA0422800	Check valve
-	3PIS3180460	Piston

Working section

Solenoid operated check valves

When the section is configurated with check valves, the coils on control must be rotated 180°.

For sections wiht upper ports

BPE(NC) type: normally closed circuit

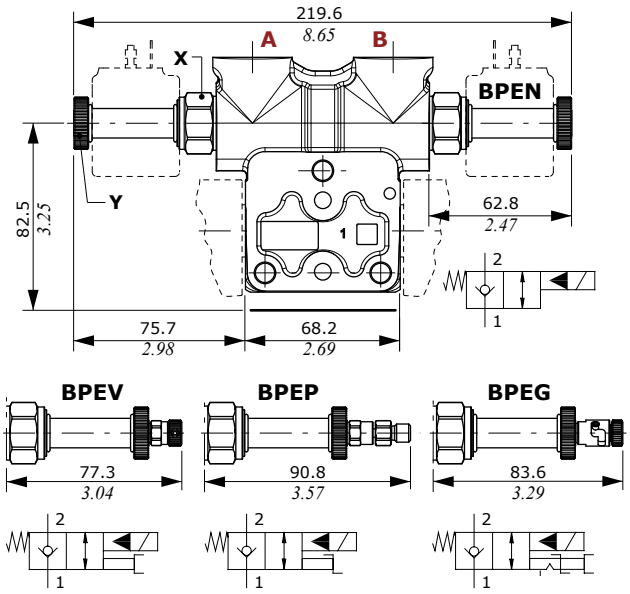

BPE(NA) type: normally open circuit

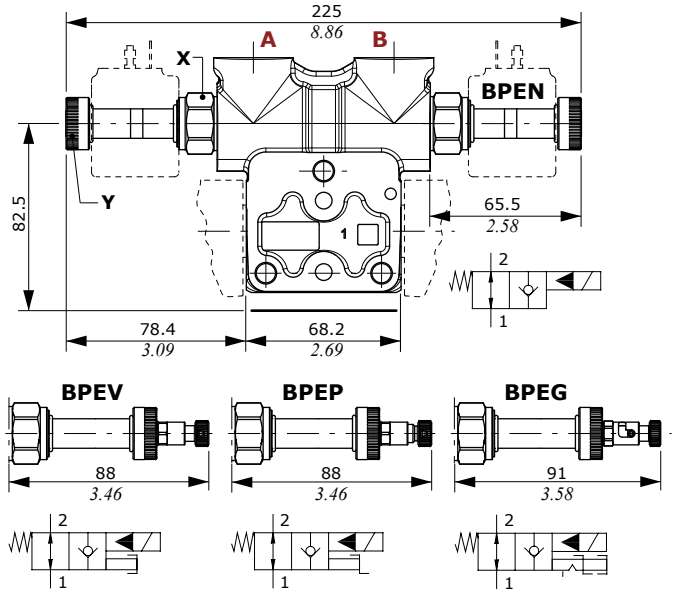

BPEN3(NC) type **BPEN1(NC) type** **BPEN2(NC) type**

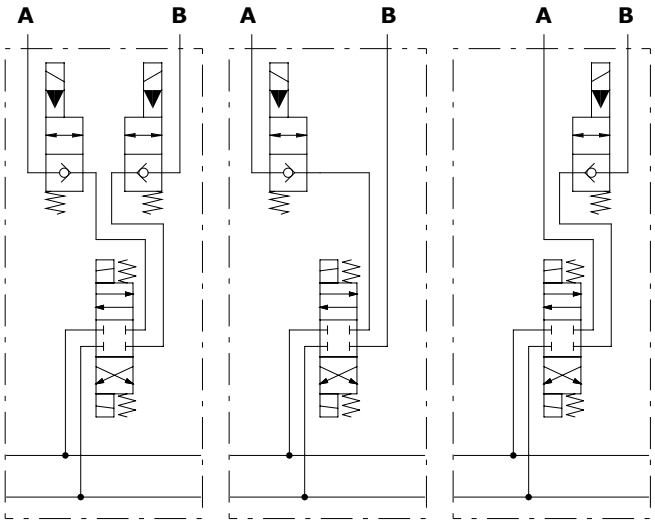

BPEN3(NA) type **BPEN1(NA) type** **BPEN2(NA) type**

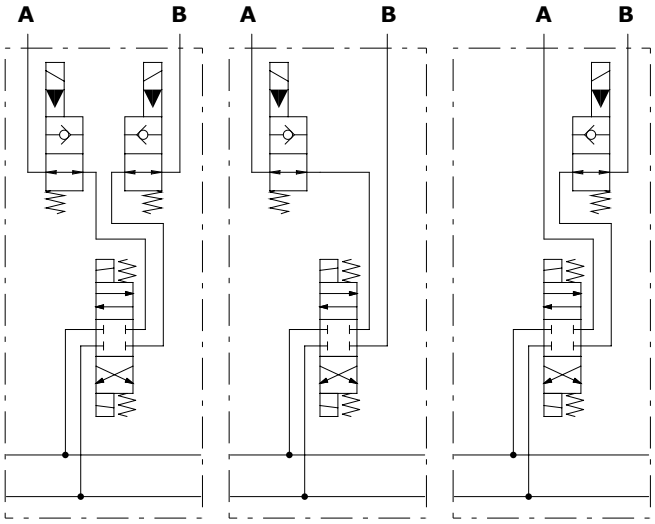

Pressure drop diagram
(working section included)

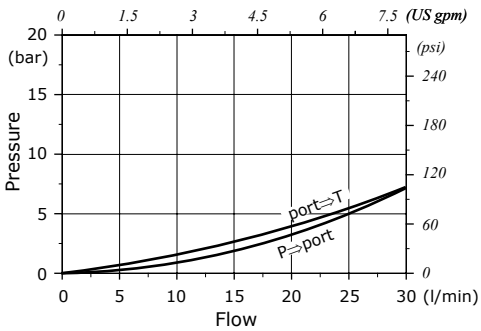

Wrenches and tightening torque

X = wrench 24 - 30 Nm *(22 lbft)*
Y = 5 Nm *(3.7 lbft)*

Legenda

BPEN: without amergency actuation
BPEP: push-button type emergency actuation
BPEV: screw type emergency actuation
BPET: "push&twist" type emergency actuation

Outlet section

Dimensions and hydraulic circuit

Without port arrangement

RF type

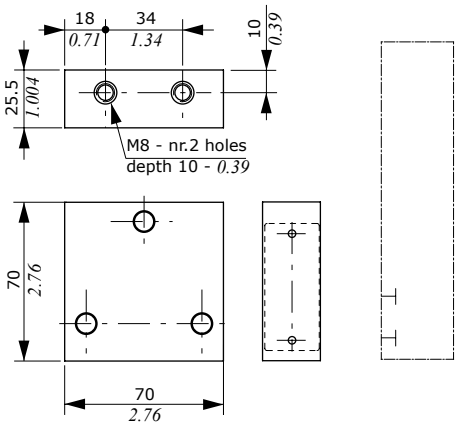

With port arrangement

RS - RP - RT types
drawing shows RS type

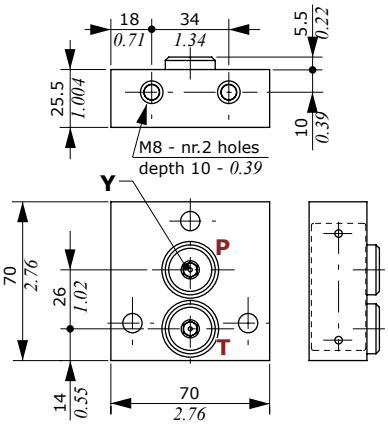

Wrenches and tightening torque
X = allen wrench 8 - 24 Nm *(17.7 lbft)*
Y = allen wrench 6 - 24 Nm *(17.7 lbft)*

RS type
P and T ports plugged

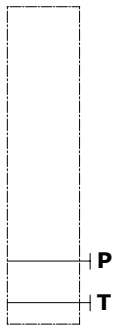

RP type
P open, T plugged

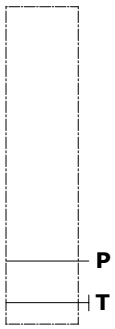

RT type
T open, P plugged

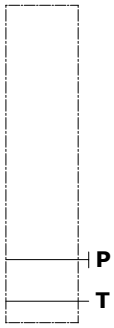

Dimensions

This drawing is referred to directional valve with mixed working sections (2 sections up 60 to l/min-*15.8 US gpm* and 2 sections up to 30 l/min-*7.9 US gpm*), and AN1 type inlet section.

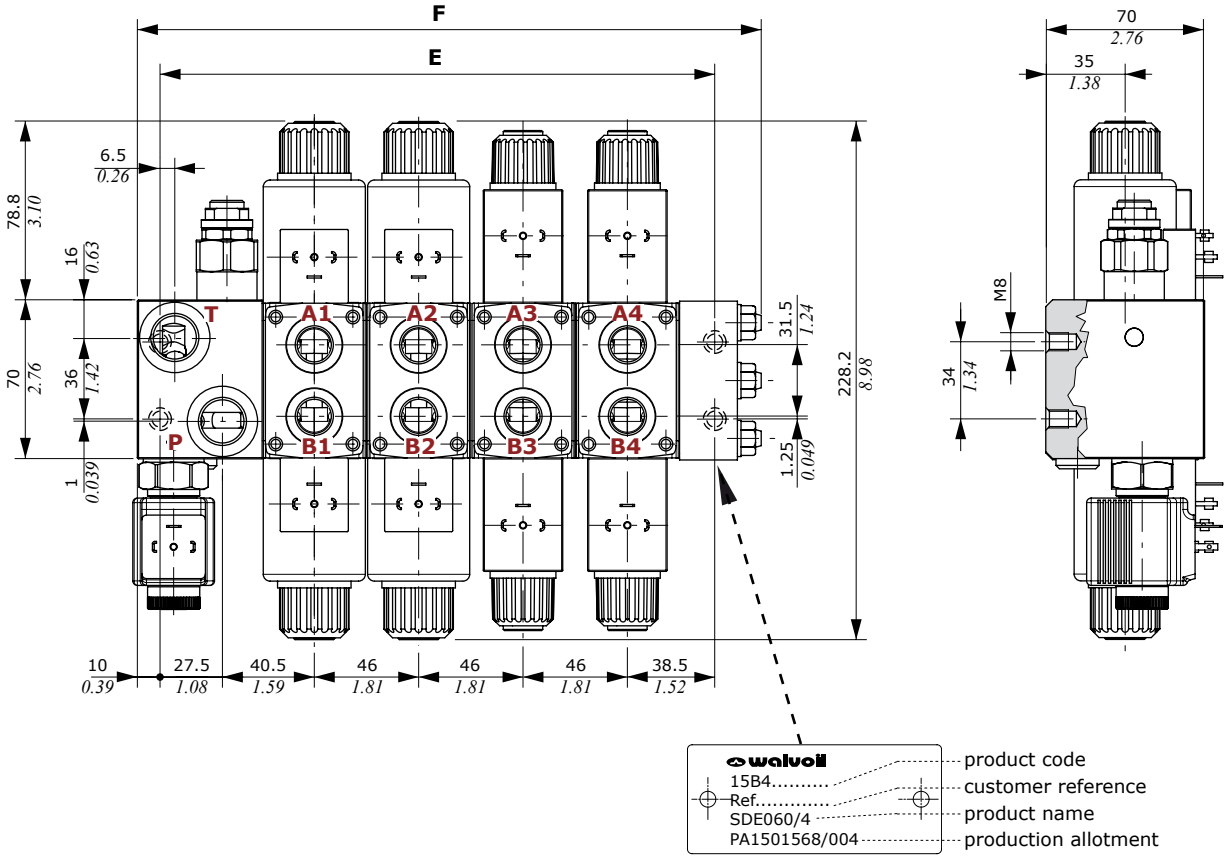

TYPE	AN type inlet section				AN1 type inlet section (see drawing)						AN2 type inlet section			
	E		F		E		F		Weight		E		F	
	mm	*in*	mm	*in*	mm	*in*	mm	*in*	Kg	*lb*	mm	*in*	mm	*in*
SDE060/1	84.5	*3.33*	117.5	*4.63*	106.5	*4.19*	139.5	*5.49*	5.08	*11.20*	137	*5.12*	170	*6.69*
SDE060/2	130.5	*5.14*	163.5	*6.44*	152.5	*6.00*	185.5	*7.30*	7.43	*16.38*	183	*7.21*	216	*8.50*
SDE060/3	176.5	*6.95*	209.5	*8.25*	198.5	*7.82*	231.5	*9.11*	9.78	*21.56*	229	*9.02*	262	*10.31*
SDE060/4	222.5	*8.76*	255.5	*10.06*	244.5	*9.63*	277.5	*10.93*	12.13	*26.74*	275	*10.83*	308	*12.13*
SDE060/5	268.5	*10.57*	301.5	*11.87*	290.5	*11.44*	323.5	*12.74*	14.48	*31.92*	321	*12.64*	354	*13.94*
SDE060/6	314.5	*12.38*	347.5	*13.68*	336.5	*13.26*	369.5	*14.55*	16.83	*37.10*	367	*14.45*	400	*15.75*
SDE060/7	360.5	*14.19*	393.5	*15.49*	382.5	*15.06*	415.5	*16.36*	19.18	*42.28*	413	*16.26*	446	*17.56*
SDE060/8	406.5	*16.00*	439.5	*17.30*	428.5	*16.87*	461.5	*18.17*	21.53	*47.47*	459	*18.07*	492	*19.37*
SDE060/9	452.5	*17.81*	485.5	*19.11*	474.5	*18.68*	507.5	*19.98*	23.88	*52.65*	505	*19.88*	538	*21.18*
SDE060/10	498.5	*19.63*	531.5	*20.93*	520.5	*20.49*	553.5	*21.79*	26.23	*57.83*	551	*21.69*	584	*22.99*

Dimensions

This drawing is referred to directional valve with all working sections up to 30 l/min (*up to 7.9 US gpm*), and N1B type inlet section.

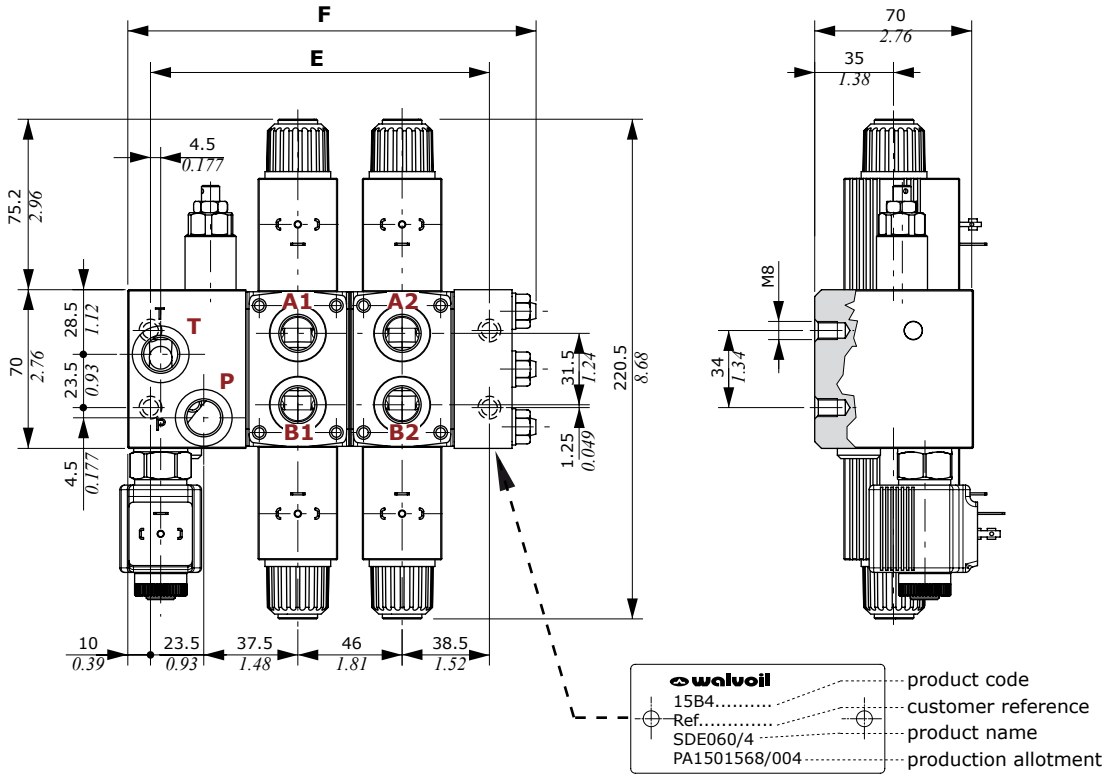

TYPE	ANB type inlet section				AN1B type inlet section (see drawing)					
	E		F		E		F		Weight	
	mm	*in*	mm	*in*	mm	*in*	mm	*in*	Kg	*lb*
SDE060/1	80	*3.15*	113	*4.45*	101.5	*3.97*	134.5	*5.30*	4.58	*10.10*
SDE060/2	126	*4.96*	159	*6.26*	147.5	*5.81*	180.5	*7.11*	6.61	*14.57*
SDE060/3	172	*6.77*	205	*8.07*	193.5	*7.62*	226.5	*8.92*	8.64	*19.05*
SDE060/4	218	*8.58*	251	*9.88*	239.5	*9.43*	272.5	*10.73*	10.67	*23.52*
SDE060/5	264	*10.39*	297	*11.69*	285.5	*11.24*	318.5	*12.54*	12.70	*28.00*
SDE060/6	310	*12.20*	343	*13.50*	331.5	*13.05*	364.5	*14.35*	14.73	*32.47*
SDE060/7	356	*14.02*	389	*15.31*	377.5	*14.86*	410.5	*16.16*	16.76	*36.95*
SDE060/8	402	*15.83*	435	*17.13*	423.5	*16.67*	456.5	*17.97*	18.79	*41.42*
SDE060/9	448	*17.64*	481	*18.94*	469.5	*18.48*	502.5	*19.78*	20.82	*45.90*
SDE060/10	494	*19.45*	527	*20.75*	515.5	*20.29*	548.5	*21.59*	22.85	*50.38*

TYPE	AN2B type inlet section				AN6B-AN7B type inlet sections			
	E		F		E		F	
	mm	*in*	mm	*in*	mm	*in*	mm	*in*
SDE060/1	128	*5.04*	161	*6.34*	120.5	*4.74*	153.5	*6.04*
SDE060/2	174	*6.85*	207	*8.15*	166.5	*6.56*	199.5	*7.85*
SDE060/3	220	*8.66*	253	*9.96*	212.5	*8.37*	245.5	*9.67*
SDE060/4	266	*10.47*	299	*11.77*	258.5	*10.18*	291.5	*11.48*
SDE060/5	312	*12.28*	345	*13.58*	304.5	*11.99*	337.5	*13.29*
SDE060/6	358	*14.09*	391	*15.39*	350.5	*13.80*	383.5	*15.10*
SDE060/7	404	*15.91*	437	*17.20*	396.5	*15.61*	429.5	*16.91*
SDE060/8	450	*17.72*	483	*19.02*	442.5	*17.42*	475.5	*18.72*
SDE060/9	496	*19.53*	529	*20.83*	488.5	*19.23*	521.5	*20.53*
SDE060/10	542	*21.34*	575	*22.64*	534.5	*21.04*	567.5	*22.34*

Parallel circuit

A parallel circuit can be composed using P or Q working sections.
The outlet section can be with or without port arrangement.

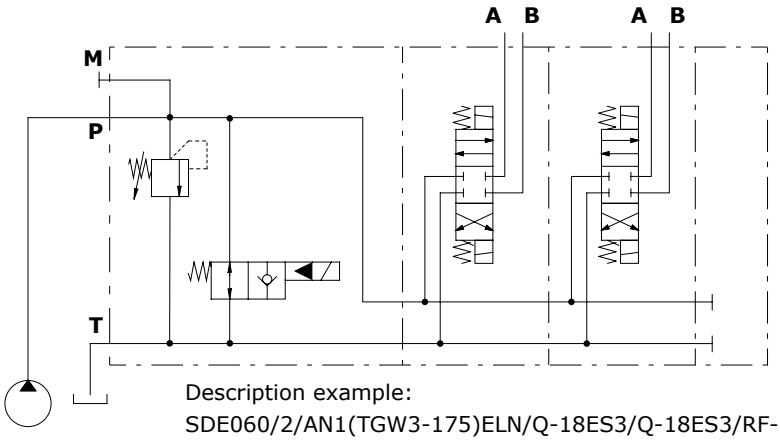

Description example:
SDE060/2/AN1(TGW3-175)ELN/Q-18ES3/Q-18ES3/RF-12VDC

Series circuit: only for 60 l/min *(15.8 US gpm)* sections

The series circuit is composed using alternately QS and Q working sections, both with 1S series spool.
The circuit starts always with QS working section.
The outlet section depends on total number of working sections: if it is even, the outlet section must have P port open, if it is odd, the outlet section must have T port open.

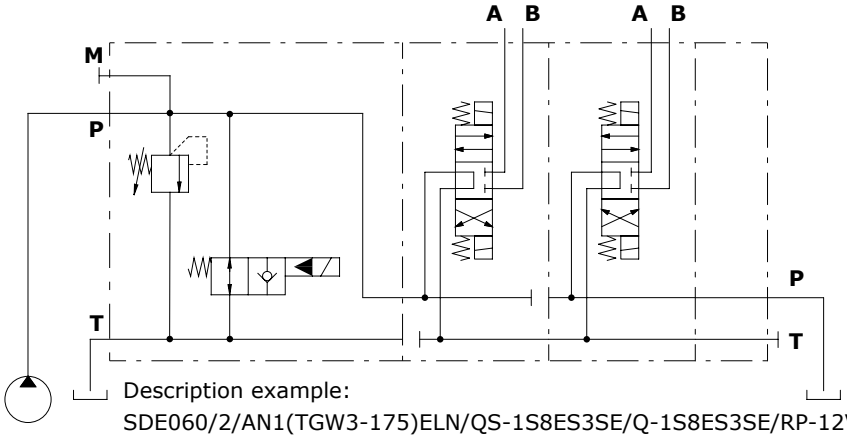

Description example:
SDE060/2/AN1(TGW3-175)ELN/QS-1S8ES3SE/Q-1S8ES3SE/RP-12VDC

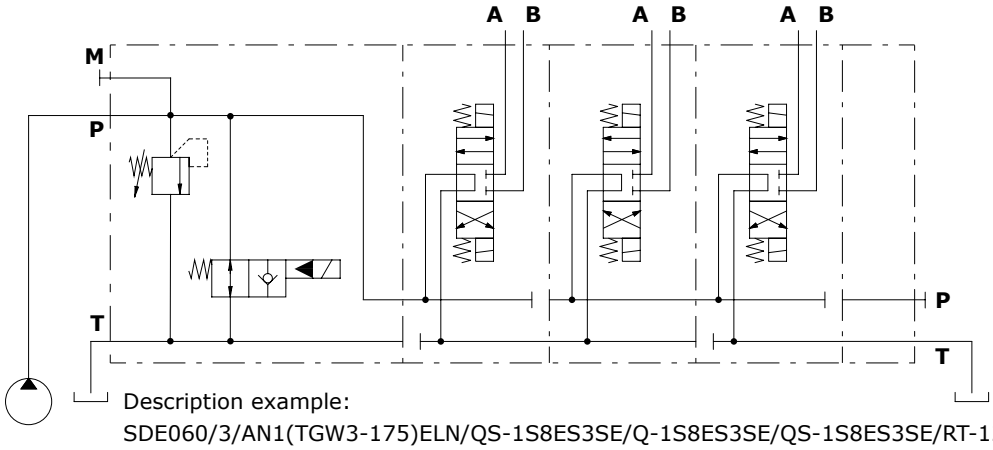

Description example:
SDE060/3/AN1(TGW3-175)ELN/QS-1S8ES3SE/Q-1S8ES3SE/QS-1S8ES3SE/RT-12VDC

Complete section ordering codes

SDE060/4/AN1(TGW3-120)ELN/Q-18ES3/Q-18ES3.BPEN3/Q-18ES3B/

Nr. of working sections — 1 — 2 — 2 — 4 — 2

Q-18ES3B.PS3(DC3-100)/RF-.....-12VDC

2 — 4 — 3 — 5 — 6

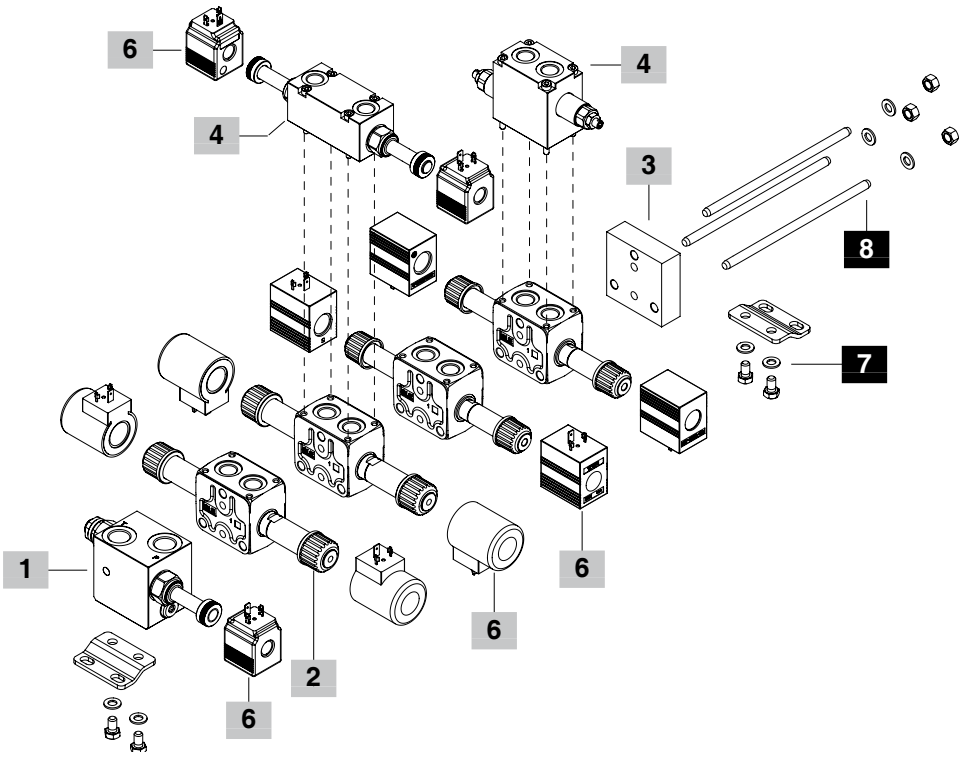

SDE060/2/AN1B(JNG3-120)ELN/Q-18ES3B/Q-18ES3B.PS3(DC3-100)/RF-.....-12VDC

Nr. of working sections — 1 — 2 — 2 — 4 — 3 — 5 — 6

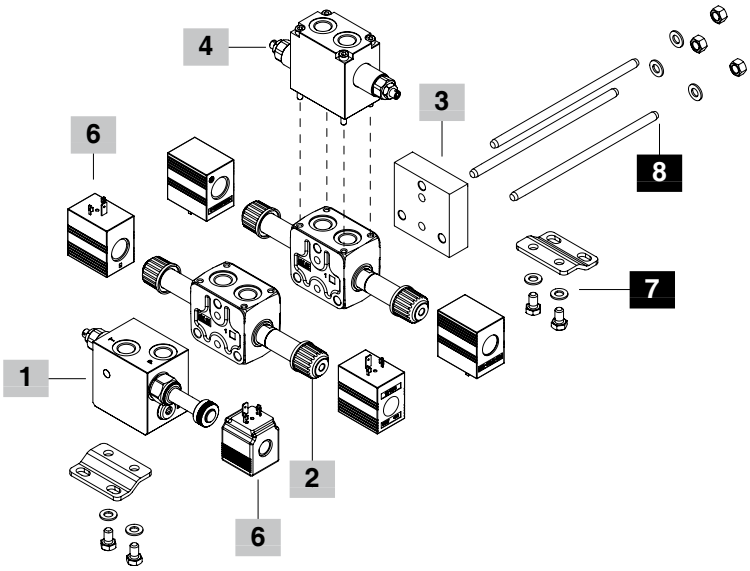

Complete section ordering codes

1 Complete inlet section * page 32

Section bodies are steel made

TYPE: **AN** CODE: 5FIA103103
DESCRIPTION: Without valves arrangement, G1/2 ports P and T open
TYPE: **ANB** CODE: 5FIA103306
DESCRIPTION: As previous one, G3/8 ports, up to 30 l/min *(7.9 US gpm)*
TYPE: **ANP** CODE: 5FIA103304
DESCRIPTION: As type AN, port P open and T plugged
TYPE: **ANPB** CODE: 5FIA103302
DESCRIPTION: As previous one, G3/8 ports, up to 30 l/min *(7.9 US gpm)*
TYPE: **ANT** CODE: 5FIA103304
DESCRIPTION: As type AN, port P plugged and T open
TYPE: **ANTB** CODE: 5FIA103302
DESCRIPTION: As previous one, G3/8 ports, up to 30 l/min *(7.9 US gpm)*
TYPE: **ANS** CODE: 5FIA103305
DESCRIPTION: As type AN, ports P and T plugged
TYPE: **ANSB** CODE: 5FIA103303
DESCRIPTION: As previous one, G3/8 ports, up to 30 l/min *(7.9 US gpm)*
TYPE: **AN1(TGW3-175)ELN-WC** CODE: Y61S603000
DESCRIPTION: With pressure relief valve and solenoid operated unloading valve, G1/2 ports P and T open
TYPE: **AN1B(JNG3-120)ELN-WC** CODE: Y61S303000
DESCRIPTION: As previous one, G3/8 ports, up to 30 l/min *(7.9 US gpm)*
TYPE: **AN1P(TGW3-175)ELN-WC** CODE: Y61S603003
DESCRIPTION: As type AN1 port P open and T plugged
TYPE: **AN1PB(JNG3-120)ELN-WC** CODE: Y61S303002
DESCRIPTION: As previous one, G3/8 ports, up to 30 l/min *(7.9 US gpm)*
TYPE: **AN2/PPXN1(TGW3-175)ELN-WC** CODE: Y61S603001
DESCRIPTION: With pressure relief valve, solenoid operated unloading valve and pressure compensated flow control valve, G1/2 ports P and T open
TYPE: **AN2B/PPXN1(JNG3-120)ELN-WC** CODE: Y61S303001
DESCRIPTION: As previous one, G3/8 ports, up to 30 l/min *(7.9 US gpm)*
TYPE: **AN2P/PPXN1(TGW3-175)ELN-WC** CODE: Y61S603006
DESCRIPTION: As type AN2, port P open and T plugged
TYPE: **AN2PB/PPXN1(JNG3-120)ELN-WC** CODE: Y61S303005
DESCRIPTION: As previous one, G3/8 ports, up to 30 l/min *(7.9 US gpm)*
TYPE: **AN6B/EEXL1(VMP02TR-220)-SB10RC(C3)-WC**
CODE: Y61S303006
DESCRIPTION: With pressure relief valve and flow control valve, for Open Center circuit, compensator with 10 bar *(145 psi)* stand-by, G3/8 ports P and T open
TYPE: **AN7B/EEXN1(VMP02TR-200)-SB10RCV(C3)-WC**
CODE: Y61S303007
DESCRIPTION: As previous one, compensator with stand-by from 0 to 10 bar *(0 to 145 psi)* and handwheel actuation for Open to Closed Center switching, G3/8 ports P and T open.

NOTE (*) – *Codes are referred to **BSP** thread.*

2 Complete working section * page 44

Section bodies are cast iron made
Sections are arranged for flangeable valve blocks

TYPE	CODE	DESCRIPTION
Q-18ES3-WC	Y63S603001C	Parallel circuit, type 1 double acting spool
Q-18ES3B-WC	Y63S303001C	As previous one, up to 30 l/min *(7.9 US gpm)*
Q-28ES3-WC	Y63S603002C	Parallel circuit, type 2 double acting spool
Q-28ES3B-WC	Y63S303002C	As previous one, up to 30 l/min *(7.9 US gpm)*
QS-1S8ES3SE-WC	Y63S603003C	Series circuit, type 1S double acting series spool
Q-1S8ES3SE-WC	Y63S603005C	Parallel circuit, type 1S double acting series spool: **placed after QS series section only**

3 Complete outlet section* page 45

Unless otherwise stated, outlet section bodies are steel made.

TYPE	CODE	DESCRIPTION
RF	3FIA203000	Without ports, aluminium alloy body
RS	619303200	G1/2 ports, P and T plugged
RSB	619301200	As previous one with G3/8 ports, up to 30 l/min *(7.9 US gpm)*
RP	619303100	G1/2 ports, P open and T plugged
RPB	619301100	As previous one with G3/8 ports, up to 30 l/min *(7.9 US gpm)*
RT	619303000	G1/2 ports, T open and P plugged
RTB	619301000	As previous one with G3/8 ports, up to 30 l/min *(7.9 US gpm)*

4 Complete flangeable valve block

Antishock valves . . . . . .page 50
Check valves . . . . . .page 51
Solenoid operated check valves (without coils) . . . . .page 52
Single counterbalance valves . . . . . .page 54
Double counterbalance valves. . . . . .page 54

5 Valve threading

Specify threading always when it is different from BSP standard (see page 4).

6 Coils page 56

Coils voltage specification; for list of available coils see pages of related sections

7 Fixing bracket page 59

TYPE	CODE	DESCRIPTION
STAF	5STA148065	Brackets with fixing screws

8 Assembling kit

CODE	DESCRIPTION	CODE	DESCRIPTION
5TIR108099	For 1 section valve	5TIR108329	For 6 section valve
5TIR108144	For 2 sections valve	5TIR108375	For 7 sections valve
5TIR108191	For 3 sections valve	5TIR108420	For 8 sections valve
5TIR108236	For 4 sections valve	5TIR108466	For 9 sections valve
5TIR108282	For 5 sections valve	5TIR108512	For 10 sections valve

Inlet section: part ordering codes

SDE060/AN-....

1 6

SDE060/ANB-....

1 6

Valve setting (bar) Without coil

SDE060/AN1(TGW3-175)ELN-WC-....

1 2 3 6

SDE060/AN1B(JNG3-120)ELN-WC-....

1 2 3 6

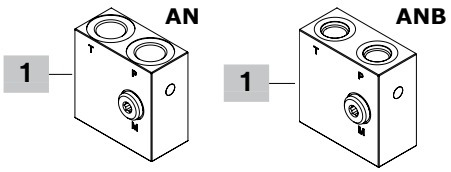

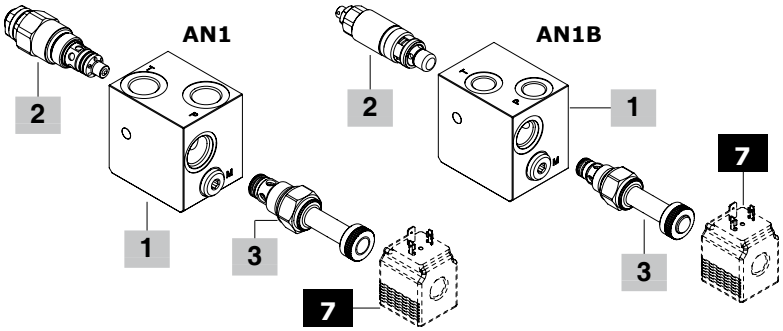

Valve setting (bar) Without coil

SDE060/AN2/PPXN1(TGW3-175)ELN-WC-....

1 4 2 3 6

SDE060/AN2B/PPXN1(JNG3-120)ELN-WC-....

1 4 2 3 6

Valve setting (bar)

SDE060/AN6B/EEXN1(VMP02TS-200)

1 4 2

SB10RCV(C3)-WC-....

5 Without coil 6

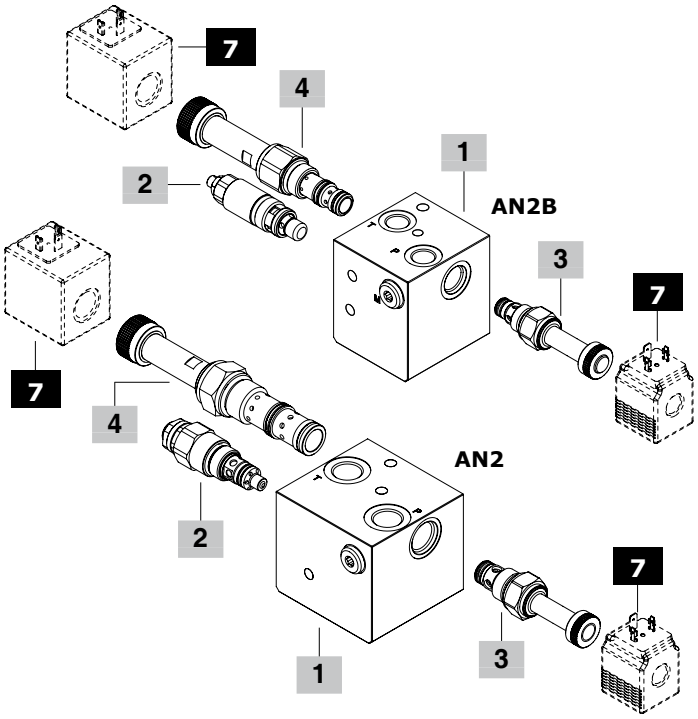

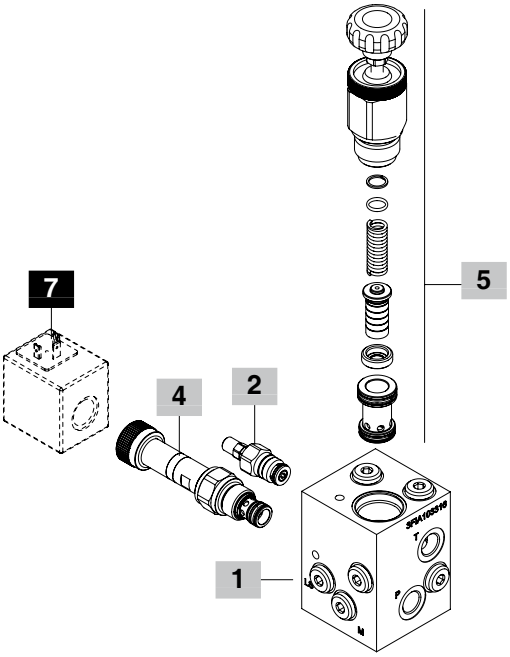

Inlet section: part ordering codes

1 Inlet section body kit * page 34

Section bodies are steel made

TYPE	CODE	DESCRIPTION
AN	5FIA103103	Without valves arrangement, G1/2 ports, P and T open
ANB	5FIA103306	As AN, G3/8 ports, up to 30 l/min *(7.9 US gpm)*
ANP	5FIA103304	As AN, port P open and T plugged
ANPB	5FIA103302	As ANP, G3/8 ports, up to 30 l/min *(7.9 US gpm)*
ANT	5FIA103304	As AN, port P plugged and T open
ANTB	5FIA103302	As ANT, G3/8 ports, up to 30 l/min *(7.9 US gpm)*
ANS	5FIA103305	As AN, ports P and T plugged
ANSB	5FIA103303	As ANS, G3/8 ports, up to 30 l/min *(7.9 US gpm)*
AN1	5FIA103307	Relief and unloader valves arrangement, G1/2 ports, P and T open
AN1P	5FIA103314	As AN1, port P open and T plugged
AN1B	5FIA103300	As AN1, G3/8 ports, up to 30 l/min *(7.9 US gpm)*
AN1PB	5FIA103312	As AN1P, G3/8 ports, up to 30 l/min *(7.9 US gpm)*
AN2	5FIA10331	Relief, unloader and flow control valves arrangement, G1/2 ports, P and T open
AN2P	5FIA103315	As AN2, port P open and T plugged
AN2B	5FIA103309	As AN2, G3/8 ports, up to 30 l/min *(7.9 US gpm)*
AN2PB	5FIA103313	As AN2P, G3/8 ports, up to 30 l/min *(7.9 US gpm)*
AN6B	5FIA103316	For Open Center, relief and flow control valves arrangement, compensator, LS port plugged, G3/8 P and T ports open
AN7B	5FIA103317	As AN6B, for Closed Center, with LS port open

2 Main relief valve page 38

TYPE	CODE	DESCRIPTION
For sections AN1-AN2 type		
Valve standard setting is referred to 5 l/min *(1.3 US gpm)* flow.		
(TGW2-80)	0MC10002023	Range 10-120 bar *(145-1750 psi)* std setting 80 bar *(1160 psi)*
(TGW3-175)	0MC10002024	Range 40-200 bar *(580-2900 psi)* std setting 175 bar *(2550 psi)*
(TGW4-250)	0MC10002025	Range 200-350 bar *(2900-5100 psi)* std setting 250 bar *(3600 psi)*
SV	XTAP526360	Relief valve blanking plug
For sections AN1B-AN2B typeV		
Valve standard setting is referred to 10 l/min *(2.6 US gpm)* flow, considering the valve mounted on inlet section.		
(JNG2-63)	5KIT105512	Range 40-63 bar *(580-900 psi)* std setting 63 bar *(900 psi)*
(JNG3-120)	5KIT105513	Range 50-200 bar *(725-2900 psi)* std setting 120 bar *(1750 psi)*
(JNG4-220)	5KIT105514	Range 160-315 bar *(2300-4600 psi)* std setting 220 bar *(3200 psi)*
(JNH2-63)	5KIT105517	As type JNG2, set and locked
(JNH3-120)	5KIT105516	As type JNG3, set and locked
(JNH4-220)	5KIT105515	As type JNG4, set and locked
(JNZT2-63)	5KIT105562	As type JNG2, anti-tampering type
(JNZT3-120)	5KIT105563	As type JNG3, anti-tampering type
(JNZT4-220)	5KIT105564	As type JNG4, anti-tampering type
SV	XTAP623282	Relief valve blanking plug
For sections AN6B-AN7B type		
Valve standard setting is referred to 1 l/min *(0.26 US gpm)* flow, considering the valve mounted on inlet section.		
(VMP02TV-50)	1100000100	Range 5-80 bar *(73-1160 psi)* std setting 50 bar *(725 psi)*
(VMP02TS-150)	1100000101	Range 50-220 bar *(725-3200 psi)* std setting 150 bar *(2200 psi)*
(VMP02TR-250)	1100000102	Range 180-350 bar *(2600-5100 psi)* std setting 250 bar *(3600 psi)*

3 Solenoid operated unloading valve page 40

TYPE	CODE	DESCRIPTION
For sections AN1-AN2 type		
ELN	0EC10002012	Without emergency override
ELV	0EC10002015	With screw type emergency override
ELP	0EC10002014	With push-button emergency override
ELT	0EC10002016	With "twist & push" emergency override
LT	3XTP3544200	Unloading valve blanking plug
For sections AN1B-AN2B type		
ELN	0EC08002031	Without emergency actuation
ELV	0EC08002034	With screw type emergency actuation
ELP	0EC08002033	With push-button emergency actuation
ELT	0EC08002035	With "twist & push" emergency actuation
LT	XTAP510320	Unloading valve blanking plug

4 Flow control valve page 41

TYPE	CODE	DESCRIPTION
For sections AN1-AN2 type		
PPAL1	0PP12002000	Hand-wheel setting type
PPAV1	0PP12002004	Screw setting type
PPXN1	0PP12002037	Solenoid operated, without emergency
PPXV1	0PP12002039	Solenoid operated, screw emergency
PPXL1	0PP12002041	Solenoid operated, hand-wheel emergency
LT	3XTP3558200	Flow control valve blanking plug
For sections AN1B-AN2B type		
PPAL1	0PP10002000	Hand-wheel setting type
PPAV1	0PP10002005	Screw setting type
PPXN1	0PP10002031	Solenoid operated, without emergency
PPXV1	0PP10002033	Solenoid operated, screw emergency
PPXL1	0PP10002035	Solenoid operated, hand-wheel emergency
LT	3XTP3545700	Flow control valve blanking plug
For sections AN6B-AN7B type		
EEXN1	0EE10002009	Solenoid operated, without emergency
EEXL1	0EE10002008	Solenoid operated, hand-wheel emergency

5 Compensator kit page 43

TYPE	CODE	DESCRIPTION
For section AN6B type		
SB10RCV(C3)	5KT6200227	With 10 bar *(145 psi)* stand-by, hand-wheel actuation for Open Center to Closed Center switching
SB10RC(C3)	5KT6200222	With 10 bar *(145 psi)* stand-by, for Open Center circuit
For section AN7B type		
CL	X451810000	Compensator blanking plug, for Closed Center circuit

6 Section threading

Specify threading always when it is different from BSP standard (see page 4).

7 Optional coil page 56

For list of available coils see pages of related section.

NOTE (*) – *Codes are referred to **BSP** thread.*

Inlet section: dimension and hydraulic circuit

AN-ANB inlet sections

AN type
with P and T ports open

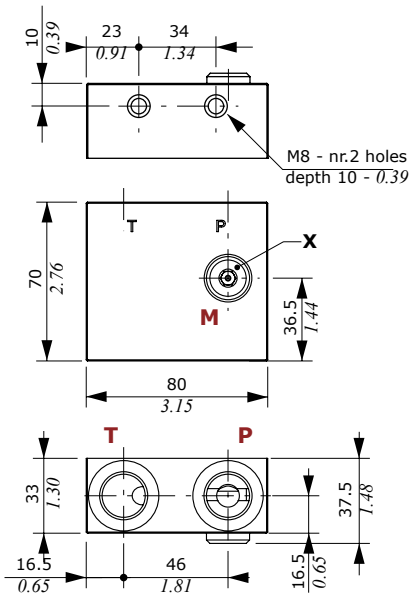

ANB type
with P and T ports open

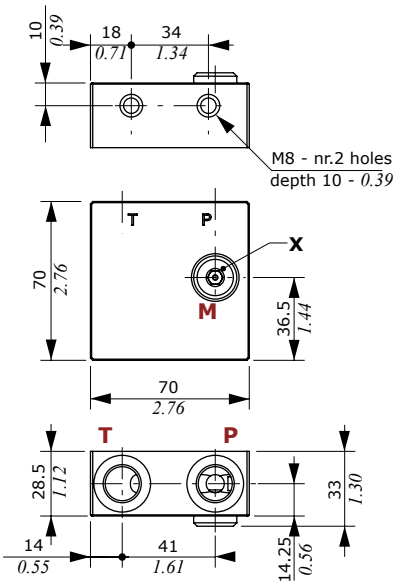

Wrenches and tightening torque
X = allen wrench 6 - 24 Nm *(17.7 lbft)*

AN-ANB type
P and T ports open

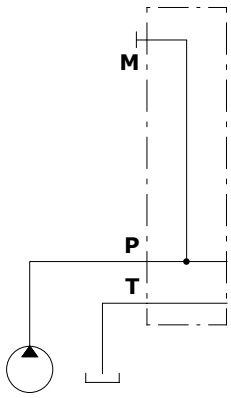

ANP-ANPB type
P port open and T port plugged

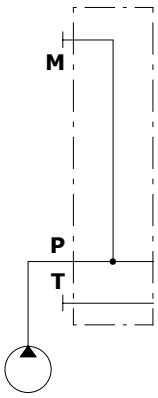

ANT-ANTB type
P port plugged and T port open

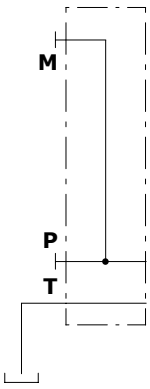

ANS-ANSB type
P and T ports plugged

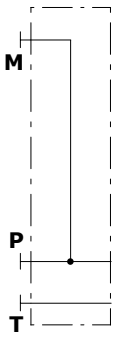

Inlet section: dimension and hydraulic circuit

AN1-AN1B inlet sections

AN1 type with P and T ports open

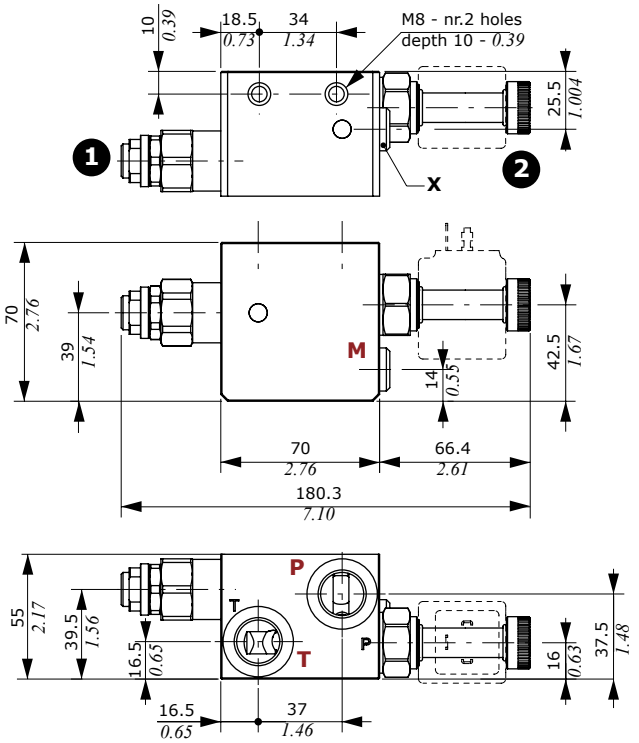

AN1B type with P and T ports open

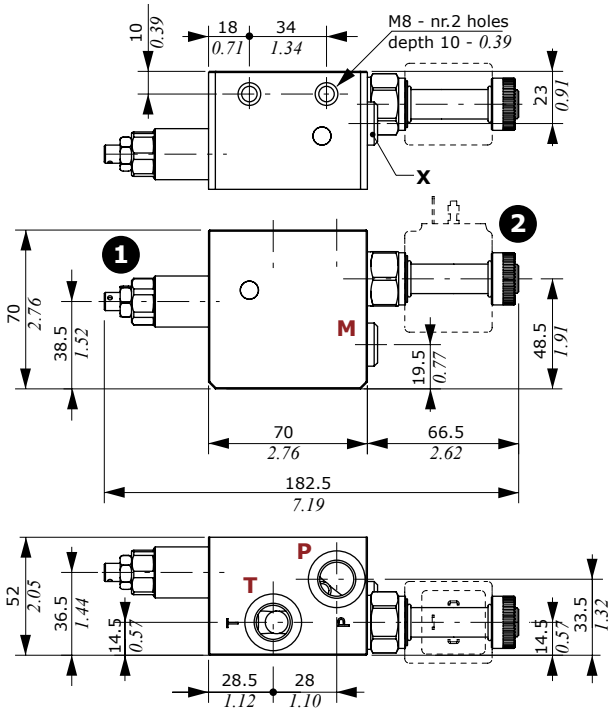

Legenda

1: Pressure relief valve

2: Solenoid operated unloading valve

Wrenches and tightening torque

X = allen wrench 6 - 24 Nm *(17.7 lbft)*

NOTE: for valve wrench and torque see pages 38 and 40.

AN1-AN1B types

P and T ports open

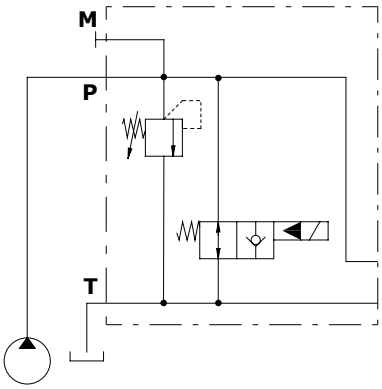

AN1P-AN1PB types

P port open and T port plugged

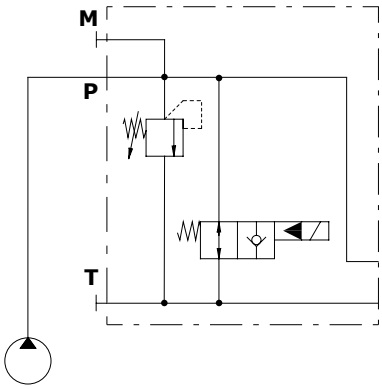

Inlet section: dimension and hydraulic circuit

AN2-AN2B inlet sections

AN2 type with P and T ports open

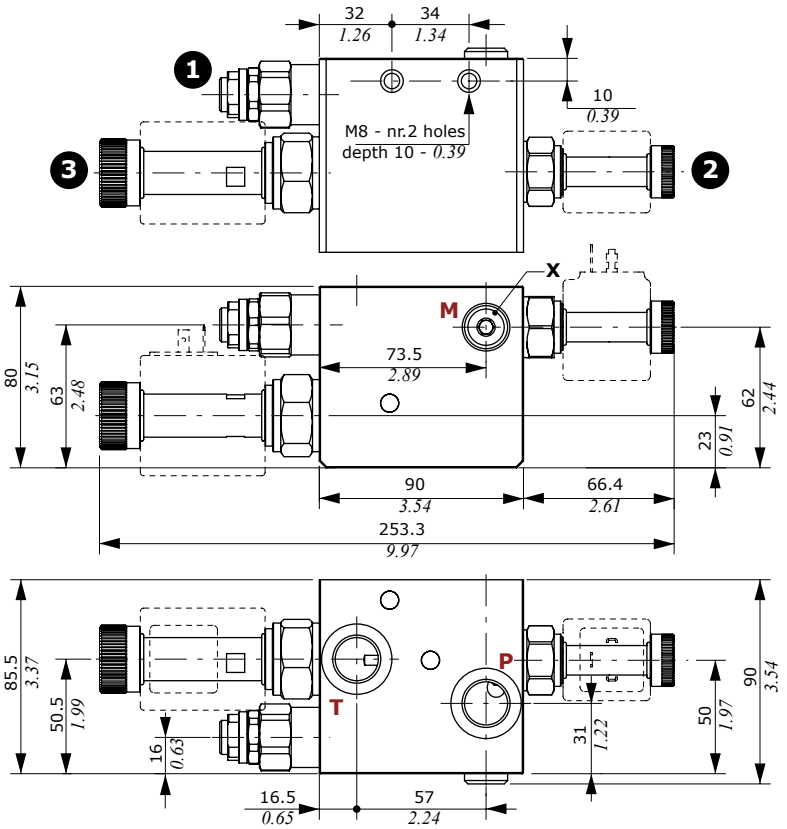

AN2B type with P and T ports open

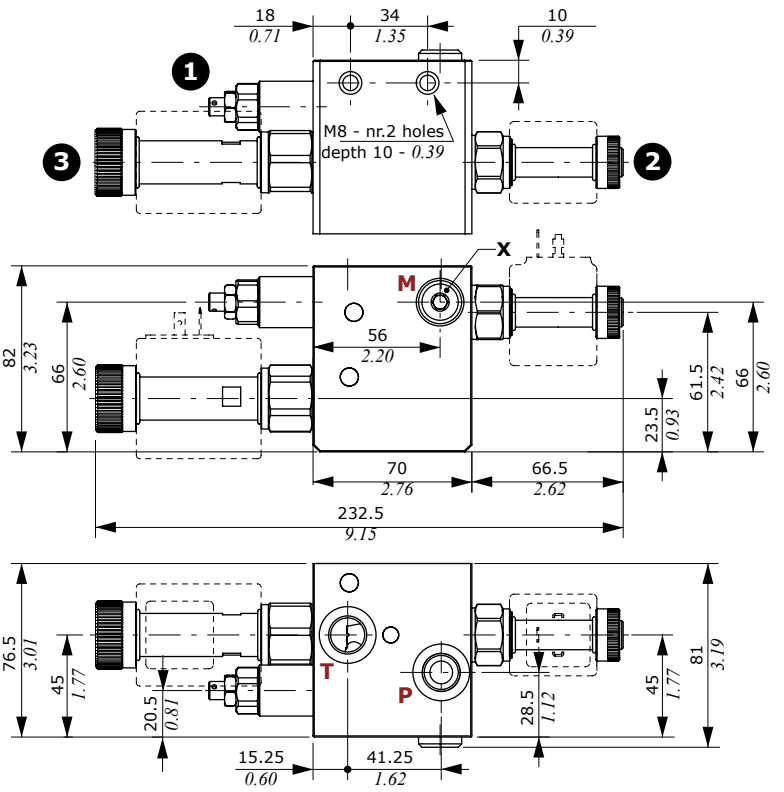

Legenda

1: Pressure relief valve
2: Solenoid operated unloading valve
3: Pressure compensated flow control valve

Wrenches and tightening torque

X = allen wrench 6 - 24 Nm *(17.7 lbft)*
NOTE: for valve wrench and torque see pages from 38 to 42.

AN2-AN2B types
P and T ports open

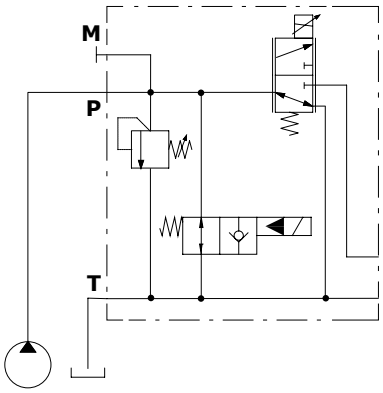

AN2P-AN2PB types
P port open and T port plugged

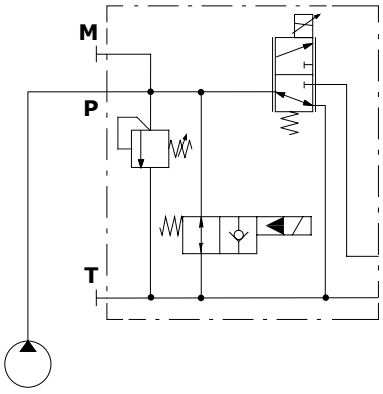

Inlet section: dimension and hydraulic circuit

AN6B-AN7B inlet sections

Legenda
1: Pressure relief valve
2: Flow control valve
3: Excludable compensator

Wrenches and tightening torque
X = allen wrench 6 - 24 Nm *(17.7 lbft)*
Y = allen wrench 4 - 9.8 Nm *(7.2 lbf)*
NOTE: for valve wrench and torque see pages 39 and 43.

AN6B type; configuration for Open and Closed Center

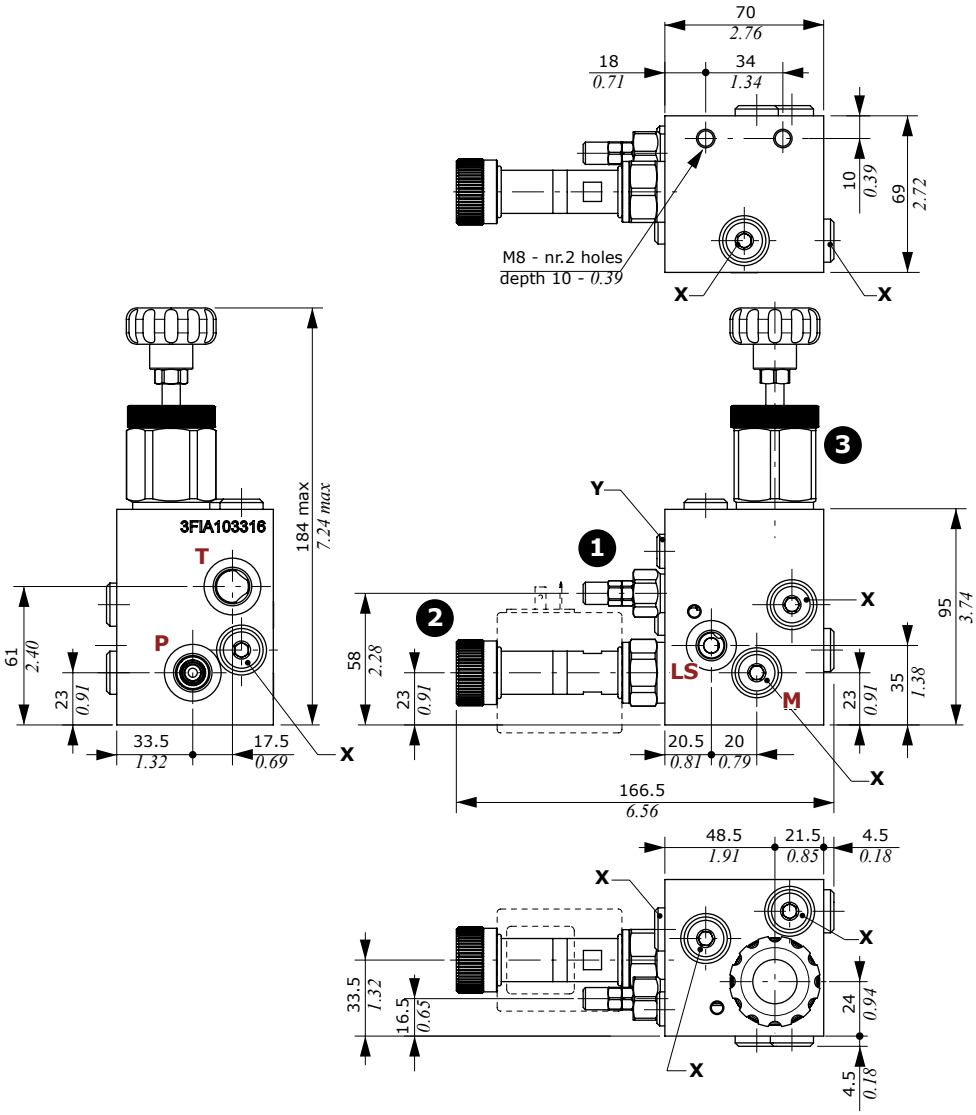

AN6B type
for Open Center circuit

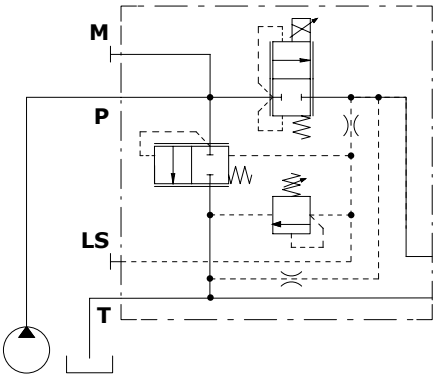

AN7B type
for Closed Center circuit

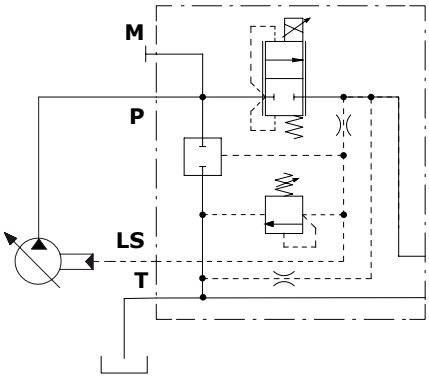

AN7B type
for Closed and Open Center circuits

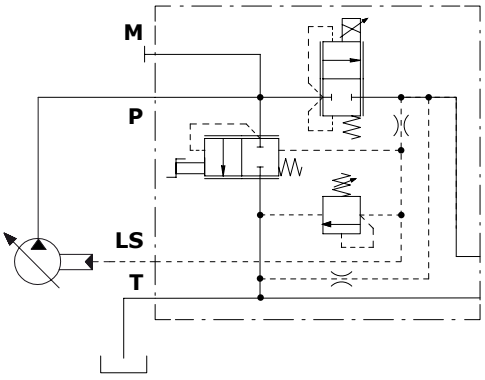

Inlet section: options

Main relief valve

For sections AN1 and AN2 type

Setting types

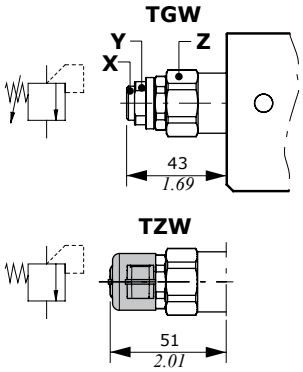

Setting range: TGW2 type

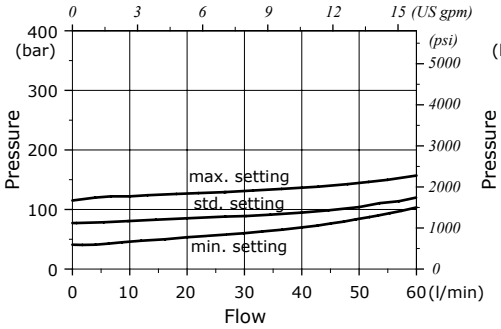

Setting range: TGW3 type

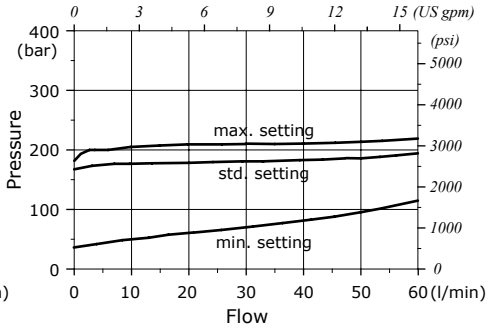

Setting range: TGW4 type

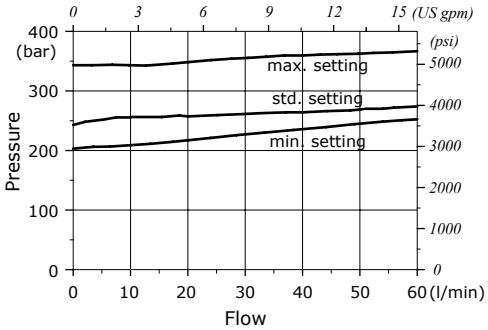

Legenda
TGW: screw setting type
TZW: with anti-tampering cap
(cap code 4COP126300, nr. 2 pcs)

Wrenches and tightening torque
X = allen wrench 5
Y = wrench 19 - 20 Nm *(14.8 lbft)*
Z = wrench 27 - 50 Nm *(37 lbft)*

For sections AN1B and AN2B type

Setting types

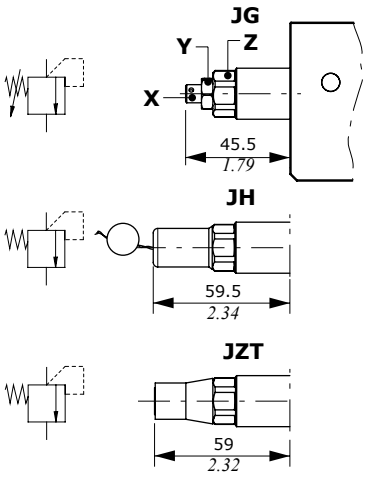

Setting range: JNG2 type

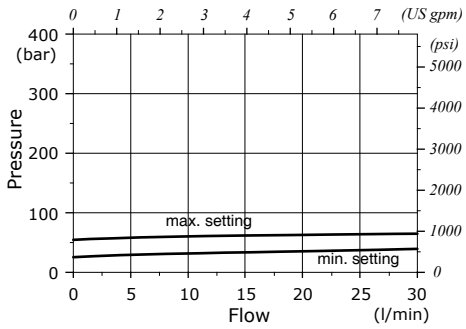

Setting range: JNG3 type

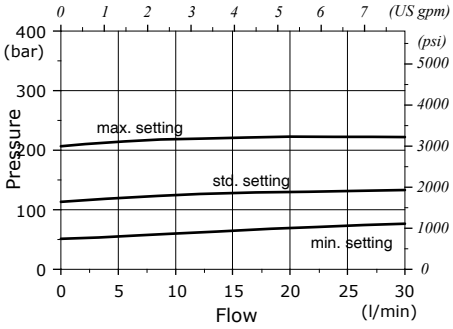

Setting range: JNG4 type

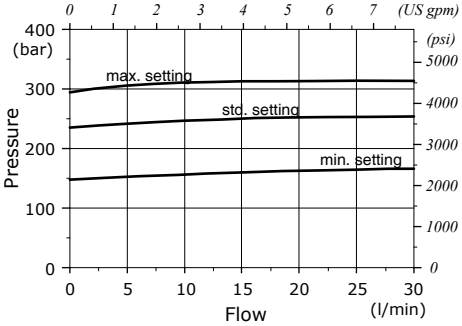

Legenda
JG: screw setting type
JH: valve set and locked
(cap code 3COP117260)
JZT: valve set and locked
(cap code 4COP120420)

Wrenches and tightening torque
X = allen wrench 4
Y = wrench 13 - 24 Nm *(17.7 lbft)*
Z = wrench 19 - 24 Nm *(17.7 lbft)*

Inlet section: options

Main relief valve

For sections AN6B and AN7B type

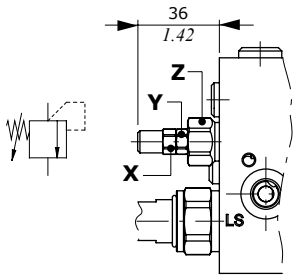

Setting range: VMP02TV type

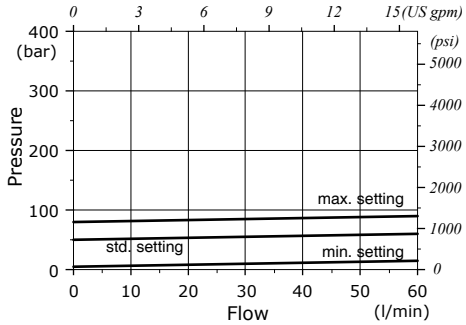

Setting range: VMP02TS type

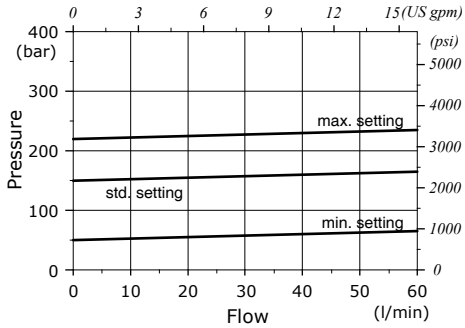

Wrenches and tightening torque

X = wrench 10
Y = wrench 10 - 6.6 Nm *(4.9 lbft)*
Z = wrench 19 - 24 Nm *(17.7 lbft)*

Setting range: VMP02TR type

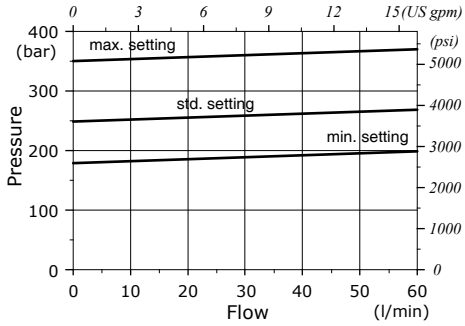

Inlet section: options

Unloading valve

For sections AN1 and AN2 type

Manual emergency actuation types

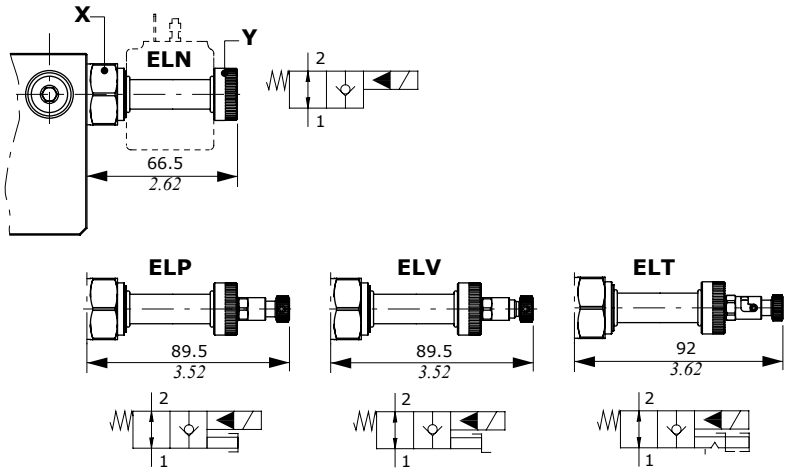

Pressure drop diagram

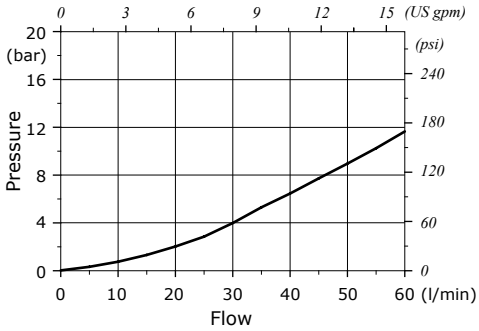

Legenda
ELN: without amergency actuation
ELP: push-button type emergency actuation
ELV: screw type emergency actuation
ELT: "push&twist" type emergency actuation

Wrenches and tightening torque
X = wrench 27 - 50 Nm *(37 lbft)*
Y = 5 Nm *(3.7 lbft)*

Features
Max. flow . . . . . .: 40 l/min *(10.6 US gpm)*
Max. pressure. . . . . .: 380 bar *(5500 psi)*
Internal leakage . . . . . .: 0.25 cm³/min @ 210 bar
(0.015 in³/min @ 3050 psi)
For coil features and options see **BER** coil on pages 56 and 57

For sections AN1B and AN2B type

Manual emergency actuation types

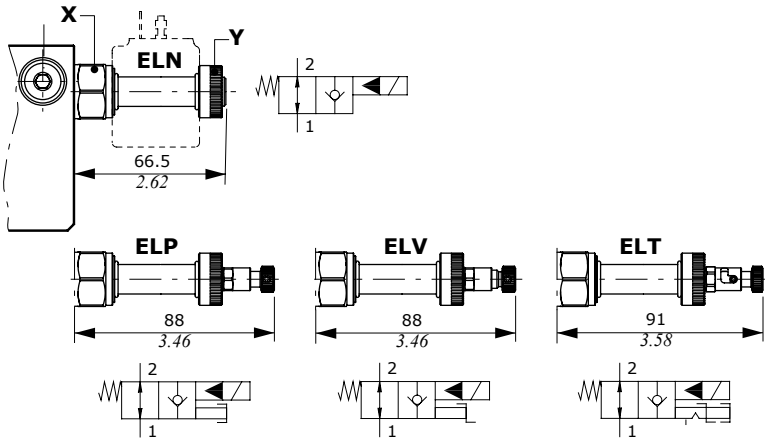

Pressure drop diagram

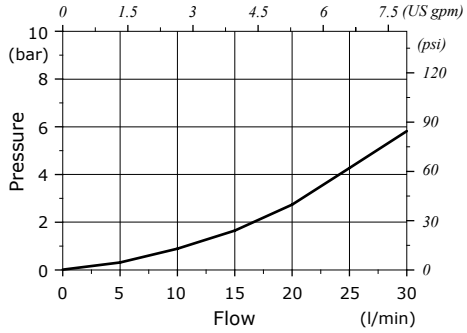

Legenda
ELN: without amergency actuation
ELP: push-button type emergency actuation
ELV: screw type emergency actuation
ELT: "push&twist" type emergency actuation

Wrenches and tightening torque
X = wrench 24 - 30 Nm *(22 lbft)*
Y = 5 Nm *(3.7 lbft)*

Features
Max. flow . . . . . .: 40 l/min *(10.6 US gpm)*
Max. pressure. . . . . .: 380 bar *(5500 psi)*
Internal leakage . . . . . .: 0.25 cm³/min @ 210 bar
(0.015 in3/min @ 3050 psi)
For coil features and options see **BER** coil on pages 56 and 57

Inlet section: options

Pressure compensated flow control valve

For section AN2 type

Manual operated

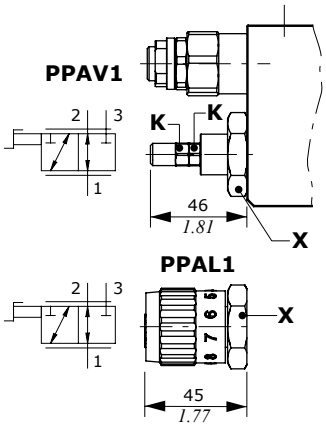

Solenoid operated

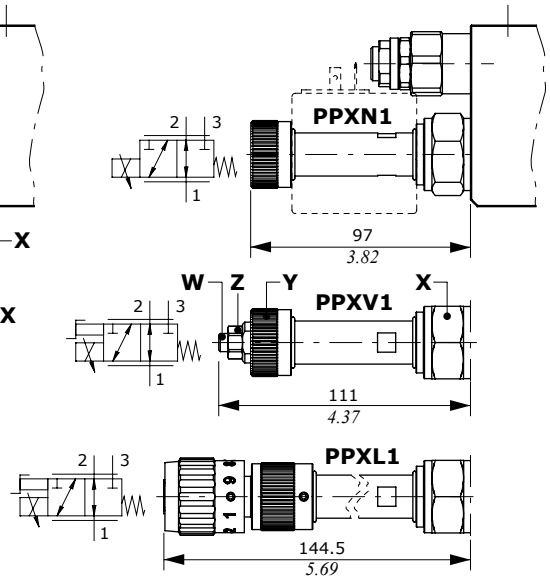

Flow regulation diagram

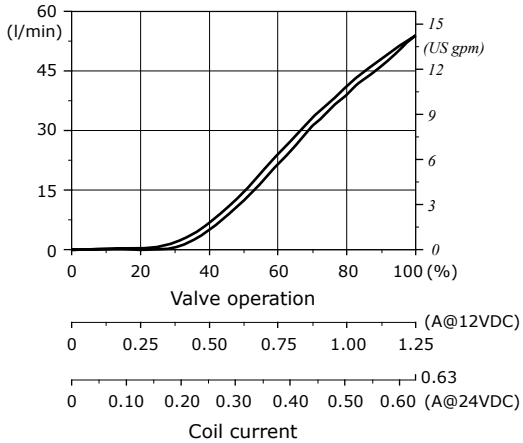

Flow vs. Pressure diagram

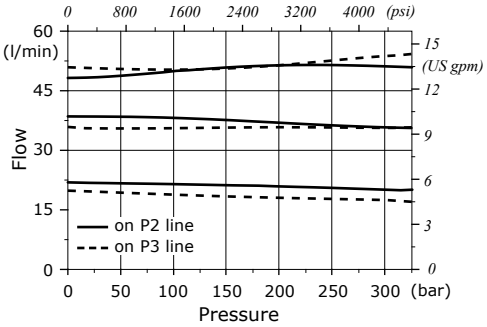

Legenda

PPAV1: screw setting type
PPAL1: hand-wheel setting type
PPXN1: without emergency actuation
PPXV1: screw type emergency actuation
PPXL1: hand-wheel emergency actuation

Wrenches and tightening torque

K = wrench 10 - 6.6 Nm *(4.9 lbft)*
X = wrench 32 - 80 Nm *(59 lbft)*
Y = 5 Nm *(3.7 lbft)*
W = allen wrench 4
Z = wrench 8 - 15 Nm *(11 lbft)*

Features

Max. inlet flow . . . . . .: 90 l/min *(23.8 US gpm)*
Max. regulated flow. . . . . .: 50 l/min *(13.2 US gpm)* - PPA types
60 l/min *(16 US gpm)* - PPX types
Inlet flow (PPX types) . . . . . .: regulated flow +15%
Max. pressure. . . . . .: 350 bar *(5100 psi)* - PPA types
315 bar *(4600 psi)* - PPX types
Internal leakage (PPX types) . .: 250 cm³/min a 210 bar
(15.3 in³/min @ 3050 psi)

For coil features and options see **BQP19** or **BH** coils on pages 56 and 57.

Inlet section: options

Pressure compensated flow control valve

For section AN2B type

Manual operated

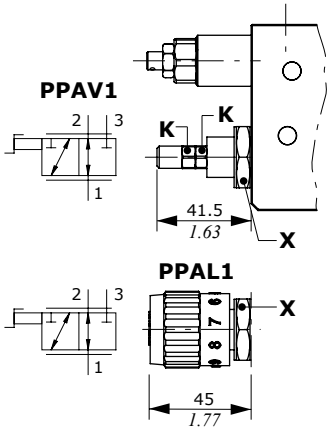

Solenoid operated

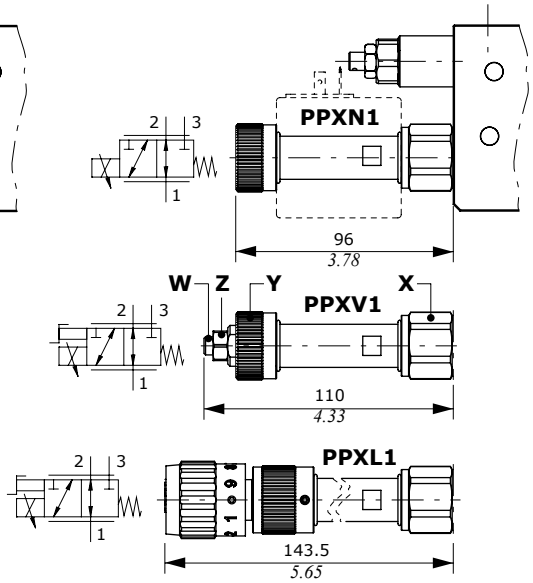

Flow regulation diagram

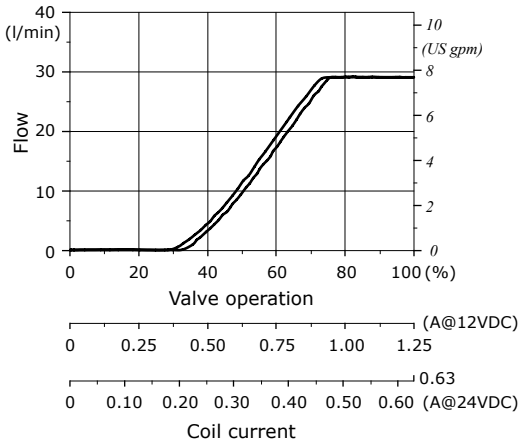

Flow vs. Pressure diagram

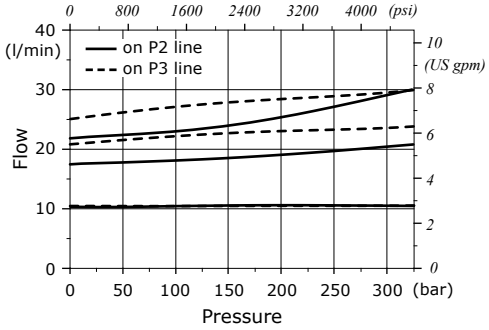

Legenda

PPAV1: screw setting type
PPAL1: hand-wheel setting type
PPXN1: without emergency actuation
PPXV1: screw type emergency actuation
PPXL1: hand-wheel emergency actuation

Wrenches and tightening torque

K = wrench 10 - 6.6 Nm *(4.9 lbft)*
X = wrench 27 - 50 Nm *(37 lbft)*
Y = 5 Nm *(3.7 lbft)*
W = allen wrench 4
Z = wrench 8 - 15 Nm *(11 lbft)*

Features

Max. inlet flow . . . . . : 50 l/min *(13.2 US gpm)*
Max. regulated flow. . . . . : 30 l/min *(7.9 US gpm)*
Inlet flow (PPX types) . . . . . : regulated flow +5%
Max. pressure. . . . . : 350 bar *(5100 psi)* - PPA types
315 bar *(4600 psi)* - PPX types
Internal leakage (PPX types) . . : 150 cm^3/min @ 210 bar
(9.1 in^3/min @ 3050 psi)

For coil features and options see **BQP19** or **BH** coils on pages 56 and 57.

Inlet section: options

Pressure compensated flow control valve

For sections AN6B-AN7B type

Curves are measured using the standard compensator mounted on section, with 10 bar *(145 psi)* stand-by.

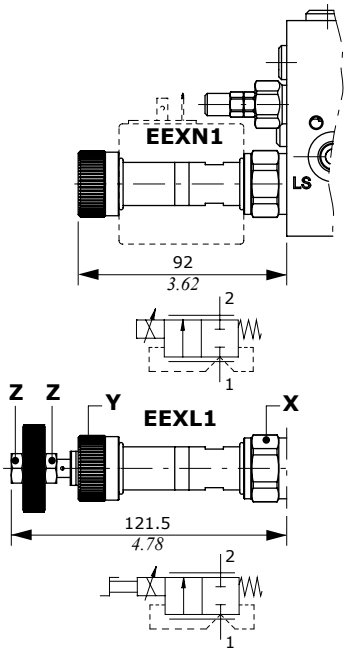

Flow regulation diagram

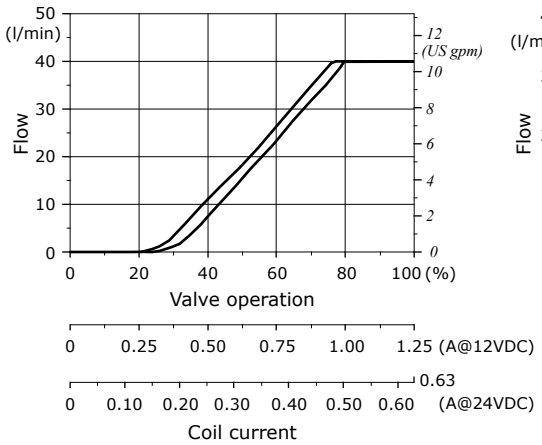

Flow vs. Pressure diagram

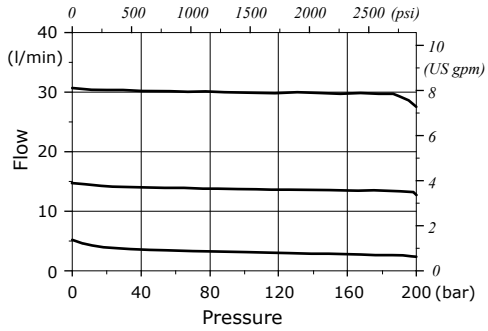

Legenda

EEXN1: without emergency actuation
EEXL1: hand-wheel emergency actuation

Wrenches and tightening torque

K = wrench 10 - 6.6 Nm *(4.9 lbft)*
X = wrench 27 - 50 Nm *(37 lbft)*
Y = 5 Nm *(3.7 lbft)*
Z = wrench 13 - 9.8 Nm *(7.2 lbft)*

Features

Max. flow . . . . . : 40 l/min *(10.6 US gpm)*
Max. pressure. . . . . : 300 bar *(5500 psi)*
Internal leakages . . . . . : 150 cm³/min @ 150 bar
(9.1 in³/min @ 2175 psi)

For coil features and options see **BQP19** or **BH** coils on pages 56 and 57.

Compensator kit

For sections AN6B-AN7B type

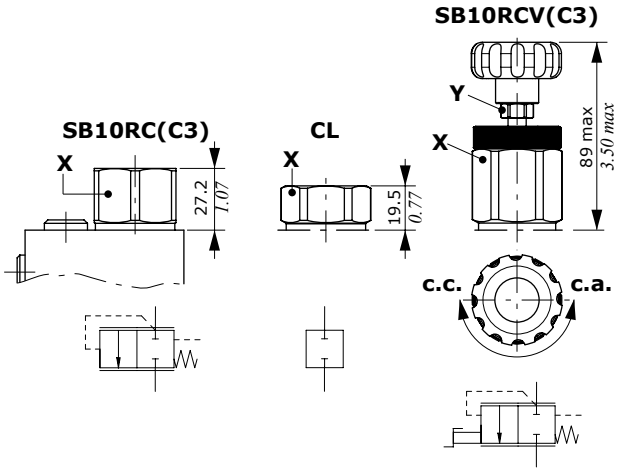

Legenda

SB10RC(C3): compensator with 10 bar *(145 psi)* stand-by, for Open Center circuit
CL: compensator blanking plug, for Closed Center circuit
SB10RCV(C3): compensator with 10 bar *(145 psi)* stand-by, hand-wheel actuation for Open Center to Closed Center circuit switching

Wrenches and tightening torque

X = wrench 36 - 42 Nm *(31 lbft)*
Y = wrench 13 - 6.6 Nm *(4.9 lbft)*

Working section: part ordering codes

Valve setting (bar)

SDE060 / P - 1 8ES3 . P3(G3-100) - WC - .....

1 2 3 4 without coil 5

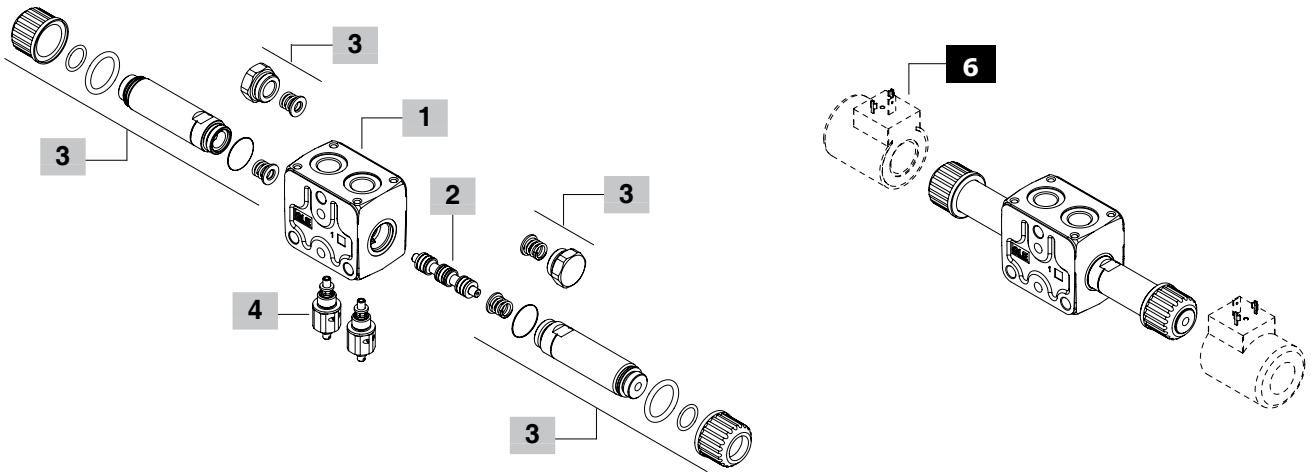

1 Working section body kit * page 45

Section bodies are cast iron made

TYPE	CODE	DESCRIPTION
Sections with standard threads: G3/8		
Q	5EL1033000	Parallel type, with arrangement for upper flangeable valve block
QS	5EL2033000	As type Q, for series circuit: **need spool type 1S#. Only for section up to 60 l/min** *(15.8 US gpm)*
Q(8)	5EL1033500	As type Q, for regenerative circuit on port A: **need spool type 8**
P	5EL1033010	As type Q, with arrangement for secondary relief valve
Sections with increased threads: G1/2		
NF-BSP12	5EL1034010	Parallel type, without arrangement for upper flangeable valve block
QSNF-BSP12	5EL1034011	As type Q, for series circuit: **needs spool type 1S#. Only for SDE060 valve**
QNF(8)-BSP12	5EL1034500	As type Q, for regenerative circuit on port A: **needs spool type 8**
PNF-BSP12	5EL1034000	As type Q, with arrangement for secondary port valves

3 On/off solenoid control page 48

TYPE	CODE	DESCRIPTION
For section up to 60 l/min *(15.8 US gpm)*		
8ES1	5CAN08E110C	Single acting on port A
8ES2	5CAN08E110C	Single acting on port B
8ES3	5CAN08E111C	Double acting
8ES3LHD	5CAN08E311	Double acting with emergency lever operation: **needs dedicated spools**
8ES3SE	5CAN08E116C	Double acting: **for spool type 1S#**
For section up to 30 l/min *(7.9 US gpm)*		
8ES1B	5CAN08E114C	Single acting on port A
8ES2B	5CAN08E114C	Single acting on port B
8ES3B	5CAN08E115C	Double acting
8ES3BLHD	5CAN08E315	Double acting with emergency lever operation: **needs dedicated spools**

2 Spool page 47

TYPE	CODE	DESCRIPTION
For ON/OFF solenoid control		
1	3CU9010102	Double acting, A and B closed in neutral pos.
1A	3CU9010103	Double acting, A to tank in neutral pos. For connect B to tank (type **1B**) is necessary to turn the spool
2	3CU9025100	Double acting, A and B to tank in neutral pos.
2H	3CU9025225	Double acting, A and B partially to tank in neutral position
1S	3CU9010101	Double acting, for series circuit: **needs control type 8ES3SE and section type QS-QSNF#**
8	3CU9080100	Double acting, for regenerative circuit, for 30 l/min *(7.9 US gpm)*: **needs section type Q8**
For ON/OFF solenoid control with emergency lever operation		
1LHD	3CU9010300	As type 1
1ALHD	3CU9010303	As type 1A
2LHD	3CU9020300	As type 2
2HLHD	3CU9020310	As type 2H

4 Port relief valves page 46

Standard setting is referred to 10 l/min *(2.6 US gpm)* flow.

TYPE	CODE	DESCRIPTION
P(G3-100)	5KIT060000	From 50 to 200 bar *(725 to 2900 psi)*, standard setting 100 bar *(1450 psi)*
P(G4-200)	5KIT060001	From 200 to 315 bar *(2900 to 4600 psi)*, standard setting 200 bar *(2900 psi)*
P3T	5KIT060100	A and B ports valve blanking plugs

5 Section threading

Specify threading always when it is different from BSP standard (see page 4).

6 Optional coils page 56

For list of available coils see pages of related sections

NOTES (**#**) – *For Series circuit configuration rules see page 29*.
(*) – *Codes are referred to **BSP** thread*.

Dimensions and hydraulic circuit

Working section Q type

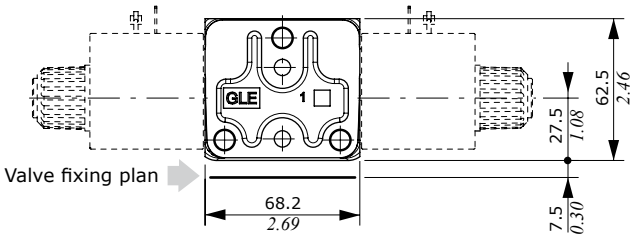

Standard port thread: G3/8
with arrangement for valve blocks

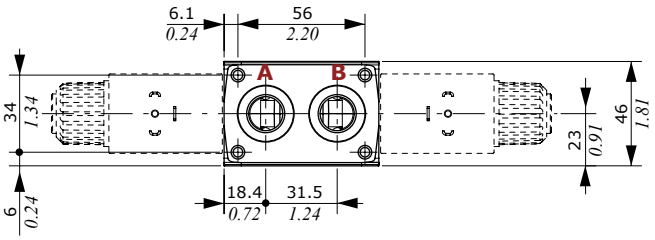

Increased port thread: G1/2
without arrangement for valve blocks (NF type)

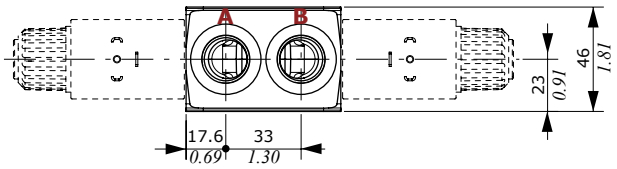

Q type: parallel circuit
(with spool type 1)

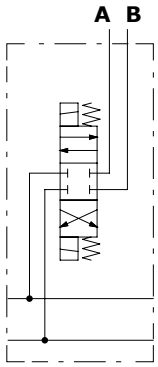

Q8 type: regenerative circuit
(needs spool type 8)

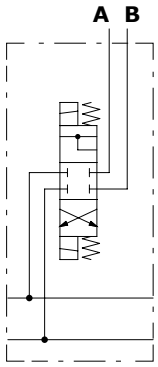

QS type for series circuit
(needs spool type 1S)

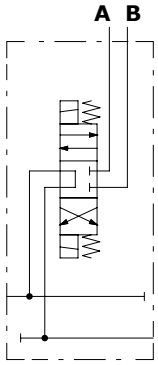

Flow through pressure drop
(parallel and regenerative circuits)

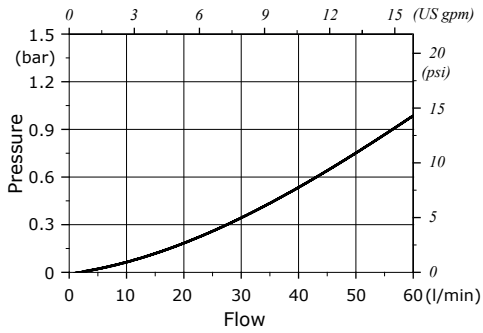

Flow through pressure drop
(QS series section with 1S spool)

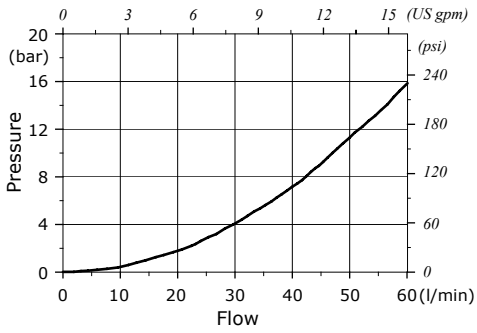

Working section

Dimension and hydraulic circuit

Working section P type

With arrangement for secondary port valves.

P type section is available also with increased port threads (G1/2): see Q type section for dimensional data.

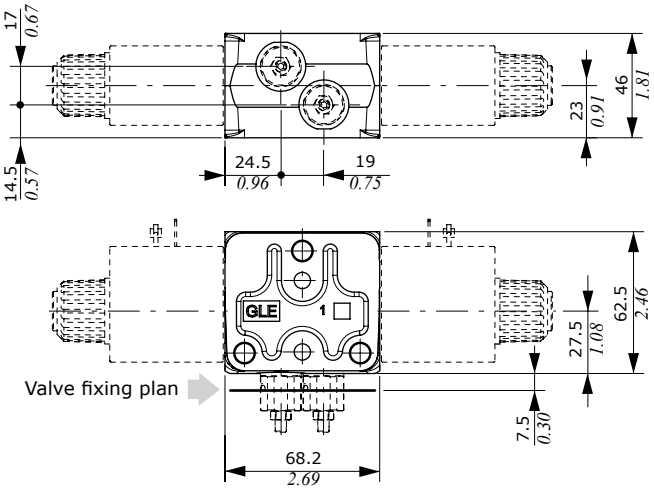

P type: parallel circuit

(with spool type 1)

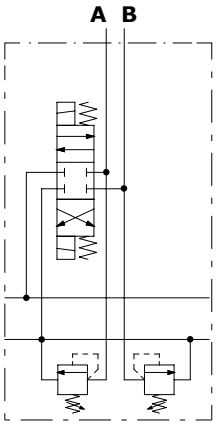

Port relief valves

G type

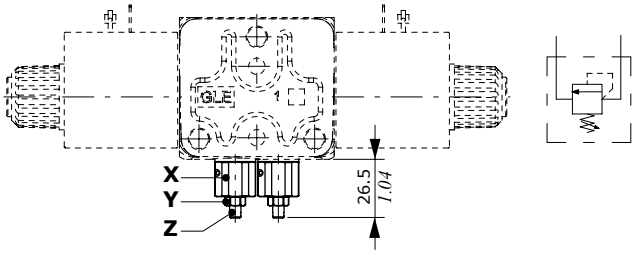

H type

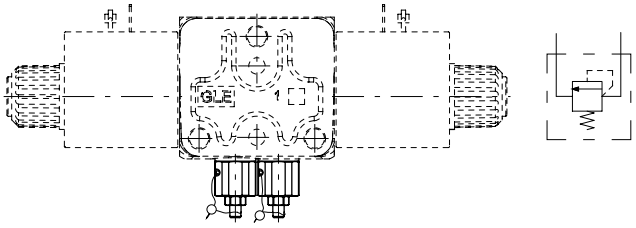

Legenda

G: screw setting type

H: valve set and locked

Wrenches and tightening torque

X = wrench 17 - 24 Nm *(17.7 lbft)*

Y = wrench 8 - 6.6 Nm *(4.9 lbft)*

Z = allen wrench 2.5

Setting range: G3 type

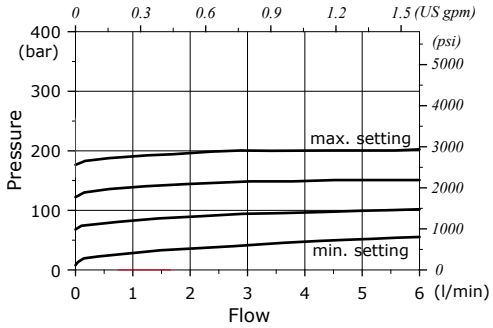

Setting range: G4 type

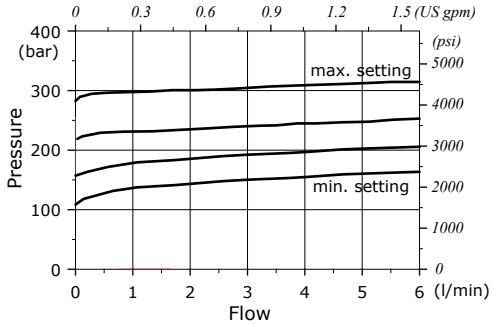

Working section

Spools

Types 1-1LHD
Double acting, A and B closed in neutral position

1 **0** 2

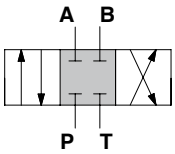

Stroke
position 1: + 3 mm *(+ 0.12 in)*
position 2: - 3 mm *(- 0.12 in)*

Types 1A-1ALHD
Double acting, A to tank in neutral position

1 **0** 2

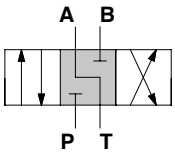

Stroke
position 1: + 3 mm *(+ 0.12 in)*
position 2: - 3 mm *(- 0.12 in)*

Types 2-2LHD
Double acting, A and B to tank in neutral position

1 **0** 2

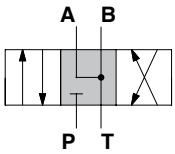

Stroke
position 1: + 3 mm *(+ 0.12 in)*
position 2: - 3 mm *(- 0.12 in)*

P⇒port - port⇒T pressure drops
(curves are matched)

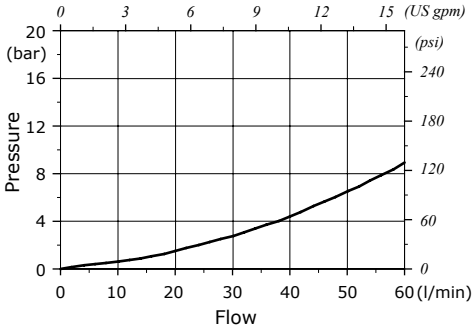

P⇒port - port⇒T pressure drops
(curves are matched)

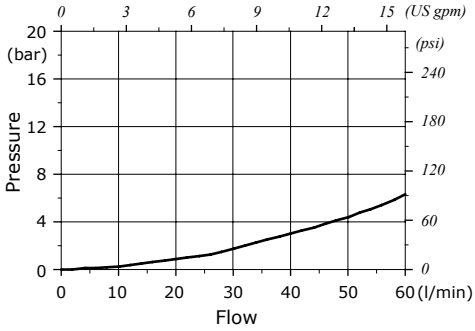

Types 2H-2HLHD
Double acting, A and B partially to tank in neutral position

1 **0** 2

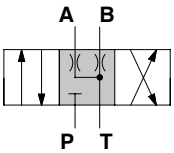

Stroke
position 1: + 3 mm *(+ 0.12 in)*
position 2: - 3 mm *(- 0.12 in)*

Types 1S
Double acting, for series circuit

1 **0** 2

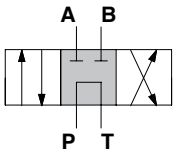

Stroke
position 1: + 3 mm *(+ 0.12 in)*
position 2: - 3 mm *(- 0.12 in)*

Types 8
Double acting, for regenerative circuit

1 **0** 2

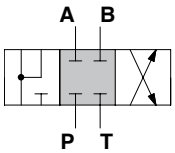

Stroke
position 1: + 3 mm *(+ 0.12 in)*
position 2: - 3 mm *(- 0.12 in)*

P⇒port - port⇒T pressure drops
(curves are matched)

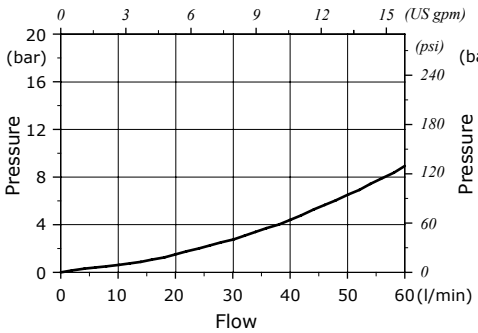

P⇒port - port⇒T pressure drops
(curves are matched)

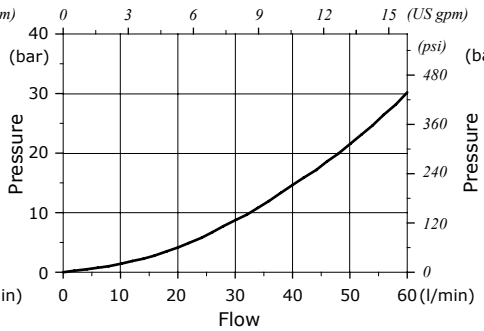

P⇒port - port⇒T pressure drops
indicated for 30 l/min *(7.9 US gpm)* max

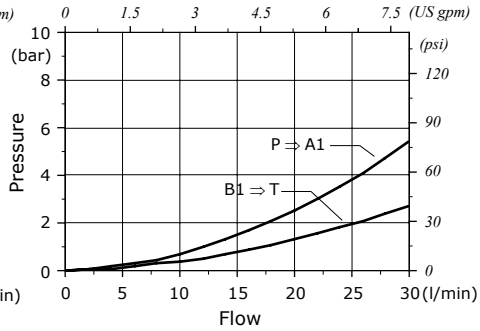

Working section

On/off solenoid control: 8ES3 - 8ES1 - 8ES2 - 8ES3SE types

For section configuration up to 60 l/min *(15.8 US gpm)* flow rate.
When the section is configurated with flangeable valve block, the coils on control must be rotated 180°

8ES3 - 8ES3SE: double acting control kit

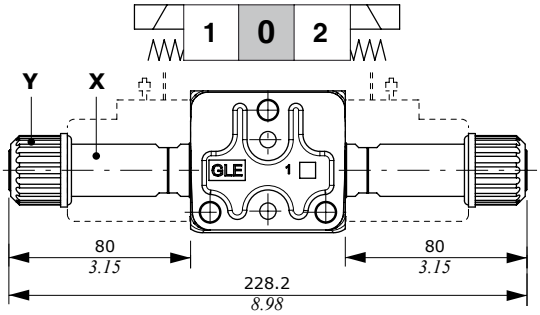

8ES1: single acting on A control kit

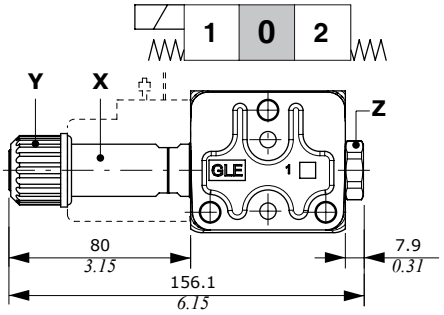

Operating condition
(stroke 3 mm - *0.12 in*)

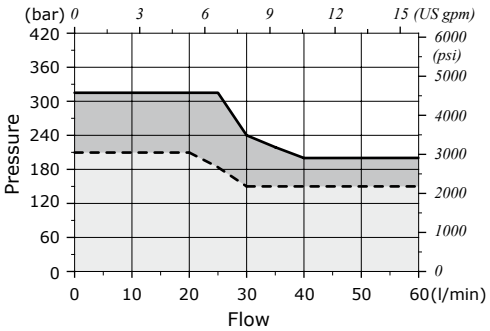

Wrenches and tightening torque
X = wrench 20 - 24 Nm *(17.7 lbft)*
Y = 15 Nm *(11 lbft)*
Z = wrench 24 - 24 Nm *(17.7 lbft)*

For coil options and features see **D15C** coil on pages 56 and 58.

—— SDE060 with 8ES3 control kit; parallel circuit
- - - SDE060 with 8ES3SE control kit; series circuit

8ES2: single acting on B control kit

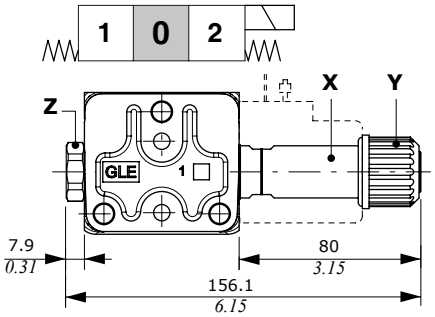

On/off solenoid control with lever: type 8ES3LHD

For section configuration up to 60 l/min *(15.8 US gpm)* flow rate; this control is not suitable for series circuit.
To properly operation the coil on lever side must be rotated 10° (figure A).
When the section is configurated with flangeable valve block, the control (with coil) must be rotated 180°.
The control needs dedicated spools: see page 44 for list.
IMPORTANT: lever to be used only for emergency operation, not for continuative use.

figure A

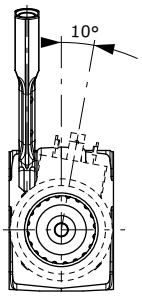

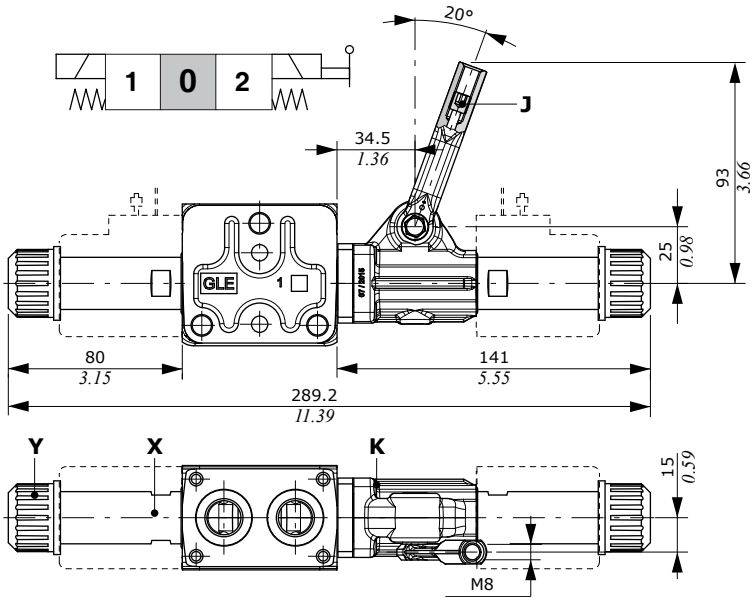

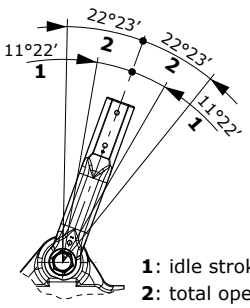

1: idle stroke angles
2: total operation angles

Wrenches and tightening torque
J = wrench 4 - 9.8 Nm *(7.2 lbft)*
K = allen wrench 4 - 6.6 Nm *(4.9 lbft)*
X = wrench 20 - 24 Nm *(17.7 lbft)*
Y = 15 Nm *(11 lbft)*

Control features
Max. back pressure on T .: 30 bar *(435 psi)*
For coil options and features see **D15C** coil on pages 56 and 58.

On/off solenoid control: 8ES3B - 8ES1B - 8ES2B types

For section configuration up to 30 l/min *(7.9 US gpm)* flow rate; control is not suitable for series circuit
When the section is configurated with flangeable valve block, the coils on control must be rotated 180°

8ES3B: double acting control kit

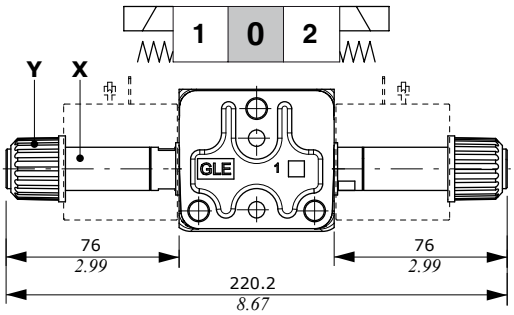

8ES1B: single acting on A control kit

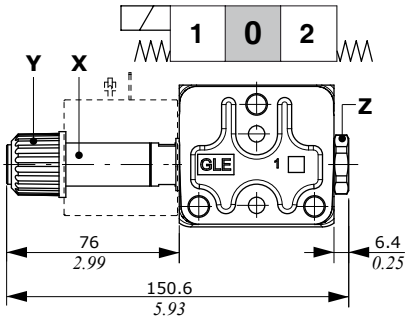

Operating condition
(stroke 3 mm - *0.12 in*)

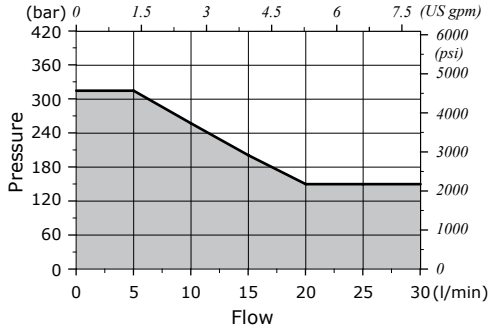

Wrenches and tightening torque
X = wrench 17 - 24 Nm *(17.7 lbft)*
Y = 6.6 Nm *(4.9 lbft)*
Z = wrench 24 - 24 Nm *(17.7 lbft)*

For coil options and features see **D12C** coil on pages 56 and 58.

8ES2B: single acting on B control kit

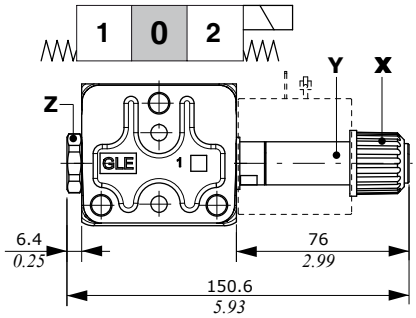

On/off solenoid control with lever: 8ES3BLHD type

For section configuration up to 30 l/min *(7.9 US gpm)* flow rate; this control is not suitable for series circuit
When the section is configurated with flangeable valve block, the control (with coil) must be rotated 180°.
The control needs dedicated spools: see page 44 for list.
IMPORTANT: lever to be used only for emergency operation, not for continuative use.

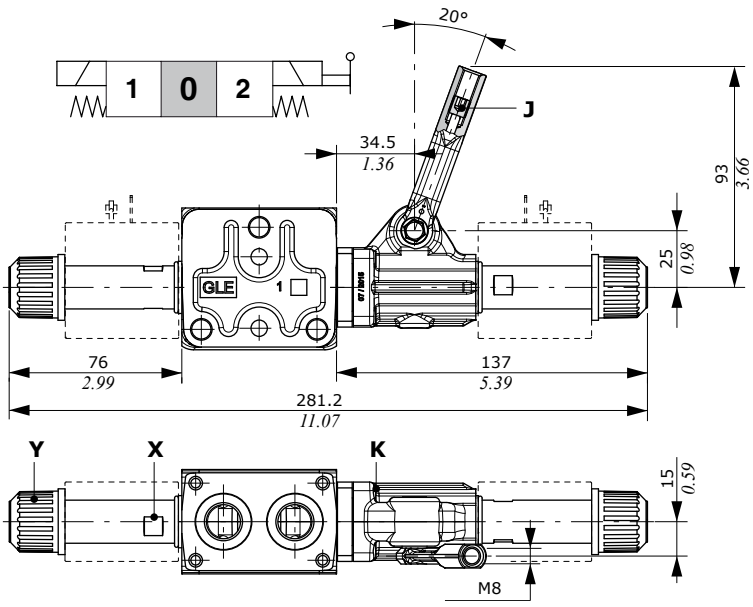

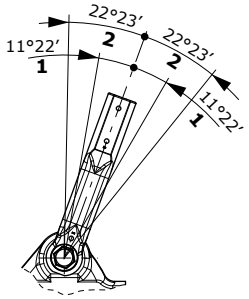

1: idle stroke angles
2: total operation angles

Wrenches and tightening torque
J = wrench 4 - 9.8 Nm *(7.2 lbft)*
K = allen wrench 4 - 6.6 Nm *(4.9 lbft)*
X = wrench 17 - 24 Nm *(17.7 lbft)*
Y = 6.6 Nm *(4.9 lbft)*

Control features
Max. back pressure on T .: 30 bar *(435 psi)*
For coil options and features see **D12C** coil on pages 56 and 58.

Flangeable valve blocks

Antishock valves with cross operation

8ES on/off solenoid controls (with or without lever operation) must be rotated 180°.

PS3 type: valves on both ports

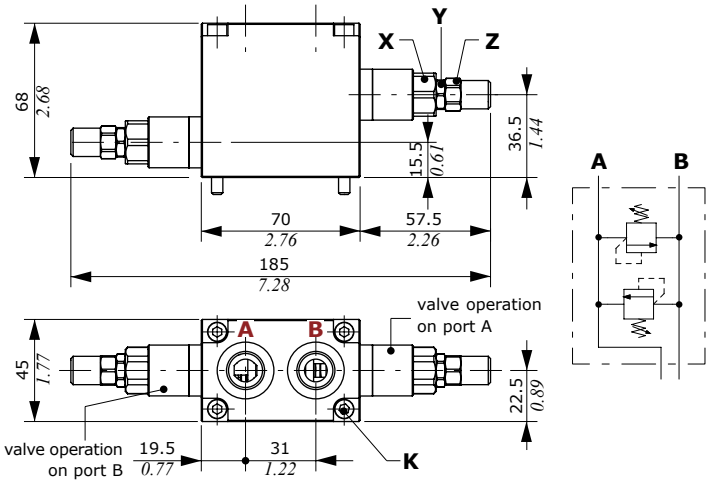

NOTE: for valve block assembly direction refer to ports name

PS1 or PS2 types: valve on single port

(PS1 type is drawn: PS2 type has the valve mounted on the opposite side and the same dimensions)

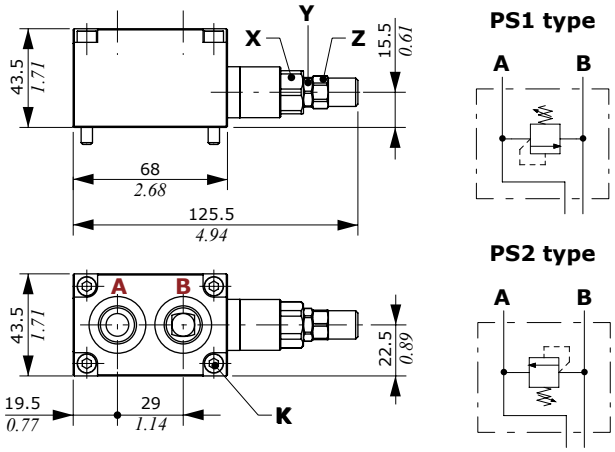

Wrenches and tightening torque

K = allen wrench 4 - 9.8 Nm *(7.2 lbft)*
X = wrench 19 - 42 Nm *(31 lbft)*
Y = wrench 13 - 24 Nm *(17.7 lbft)*
Z = wrench 13 - 6.6 Nm *(4.9 lbft)*

Ordering codes

TYPE	CODE	DESCRIPTION
Complete antishock valves		
PS1(DC3-160)	619001000	Valve with operation on port A
PS2(DC3-160)	619001000	Valve with operation on port B
PS3(DC3-160\DC4-200)		
	619001103	Valves with operation on port A (160) and B (200)

Part #1: Valve kit

Valve standard setting is referred to 5 l/min *(1.3 US gpm)* flow, considering the valve mounted on block.

(DC2-60)	1100520460	Range 20-80 bar *(290-1150 psi)* std setting 60 bar *(870 psi)*
(DC3-160)	1100520408	Range 50-220 bar *(725-3200 psi)* std setting 160 bar *(2300 psi)*
(DC4-280)	1100520414	Range 180-350 bar *(2600-5100 psi)* std setting 280 bar *(4050 psi)*
PST	XTAP623282	Valve blanking plug

Part #2: Block body kit

PS1-PS2	5COR245682	For single valve on port A or B
PS3	5COR245680	For valves on port A and B

Antishock valve pressure drops
P⇒port - port⇒T
(curves are matched)

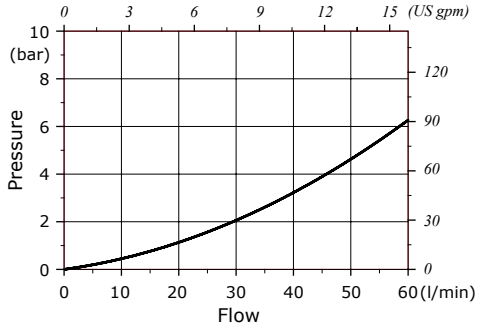

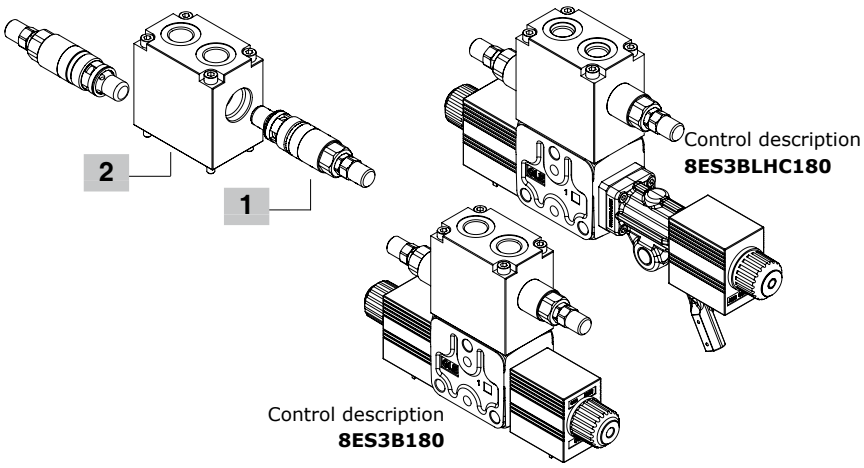

Setting range

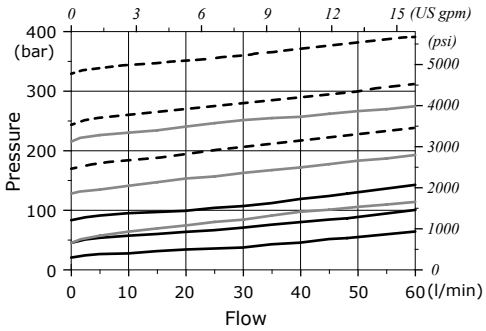

Valve type DC2
Valve type DC3
Valve type DC4

Flangeable valve blocks

Check valves

8ES on/off solenoid controls (with or without lever operation) must be rotated 180°.

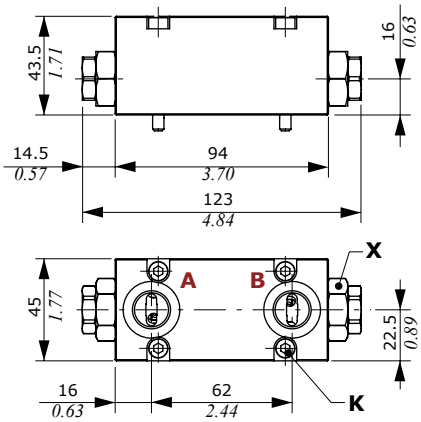

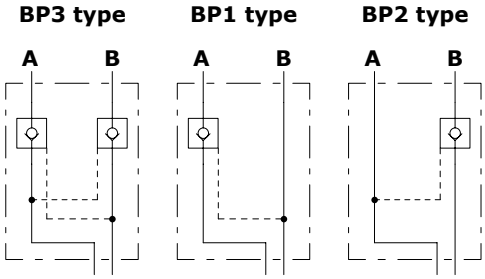

Wrenches and tightening torque

K = allen wrench 4 - 9.8 Nm *(7.2 lbft)*

X = wrench 29 - 42 Nm *(31 lbft)*

Ordering codes

TYPE	CODE	DESCRIPTION
Complete valve block		
BP1	619002000	Valve on port A
BP2	619002000	Valve on port B
BP3	619002100	Valves on ports A and B
Part #1: Valve kit		
BP	1300020402	Check valve
TBP	XTAP627260	Valve blanking plug
Part #2: Body kit and piston		
-	5COR245892	Block body kit
-	3PIS214480	Piston

Check valve pressure drop

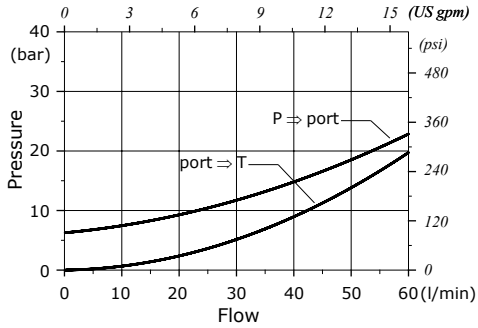

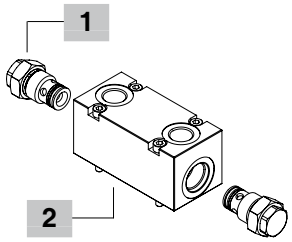

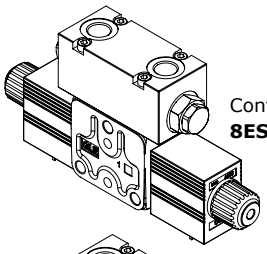

Control description
8ES3B180

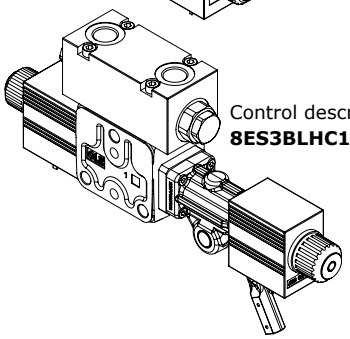

Control description
8ES3BLHC180

Flangeable valve blocks

Solenoid operated check valves

8ES on/off solenoid controls (with or without lever operation) must be rotated 180°.

BPE(NC) type: normally closed circuit

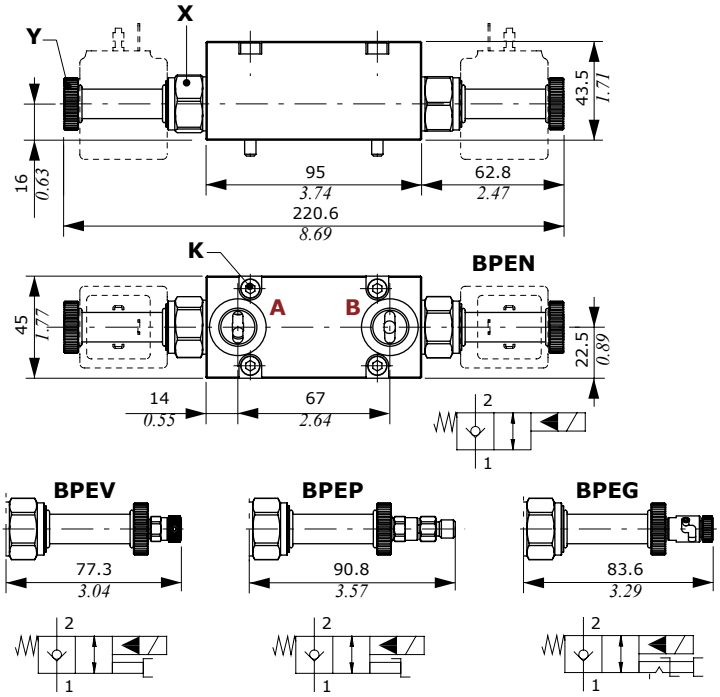

BPEN3(NC) type

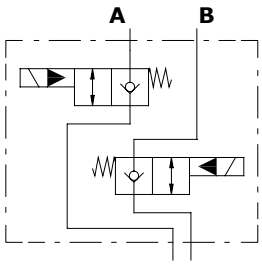

BPEN1(NC) type **BPEN2(NC) type**

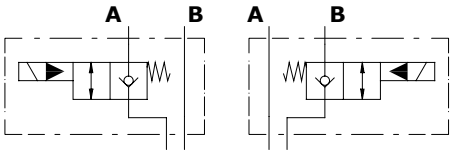

Wrenches and tightening torque

K = allen wrench 4 - 9.8 Nm *(7.2 lbft)*
X = wrench 24 - 30 Nm *(22 lbft)*
Y = 5 Nm *(3.7 lbft)*

BPE(NA) type: normally open circuit

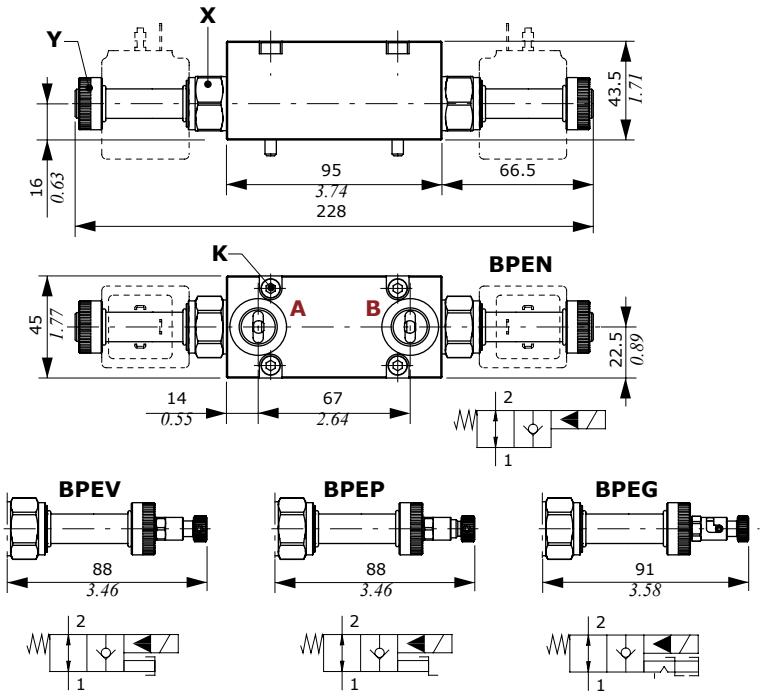

BPEN3(NA) type

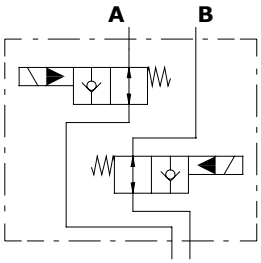

BPEN3(NA) type **BPEN3(NA) type**

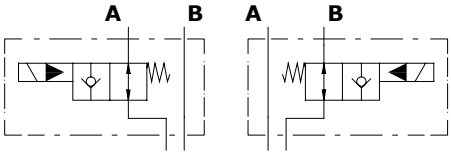

Solenoid operated check valves

Check valve pressure drop
(curves without section)

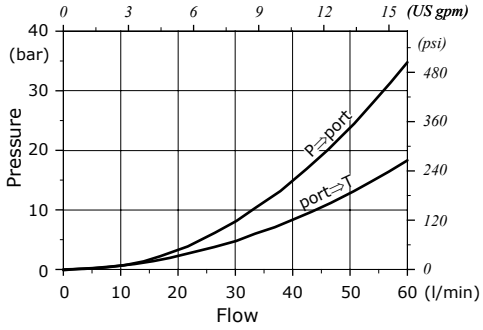

Ordering codes

TYPE	CODE	DESCRIPTION
Complete valve block, without coil		
BPEN1(NC)-WC	Y64S363001	On ports A, NC circuit, without manual emergency
BPEN2(NC)-WC	Y64S363001	As previous, on port B
BPEN3(NC)-WC	Y64S363000	As previous, on ports A and B
Part #1: Valve kit		
TBPE	3XTAP822150	Valve blanking plug
Normally closed circuit		
BPEN(NC)	0EC08002032	Without manual emergency
BPEV(NC)	0EC08002037	With screw type emergency
BPEP(NC)	0EC08002036	With pull-button emergency
BPET(NC)	0EC08002038	With "pull & twist" emergency
Normally open circuit		
BPEN(NA)	0EC08002031	Without manual emergency
BPEV(NA)	0EC08002034	With screw type emergency
BPEP(NA)	0EC08002033	With push-button emergency
BPET(NA)	0EC08002035	With "push & twist" emergency
Part #2: Block body kit		
BPE3	5COR245950	Block body kit
Part #3: Coil		

Valves needs type BER coil, see page 56.

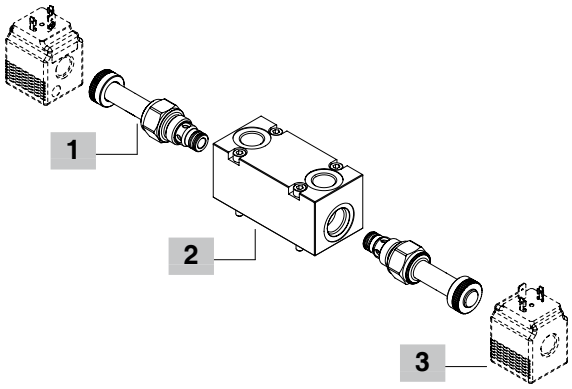

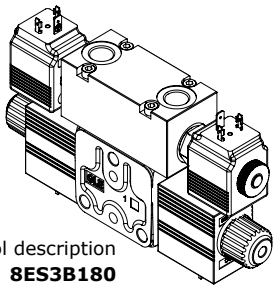

Control description
8ES3B180

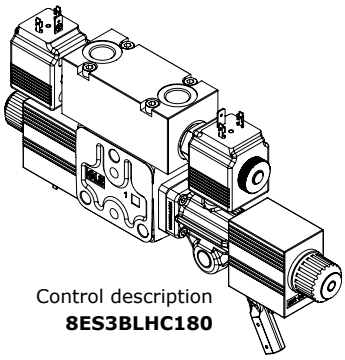

Control description
8ES3BLHC180

Flangeable valve blocks

Counterbalance valves

8ES on/off solenoid controls (with or without lever operation) must be rotated 180°.

Double acting valve

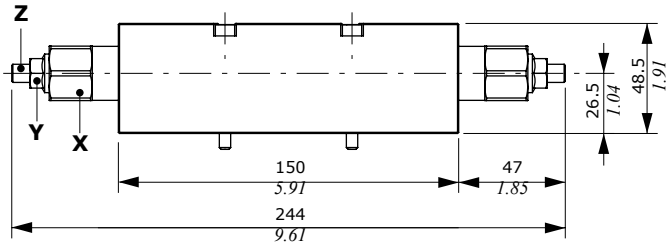

Single acting valve

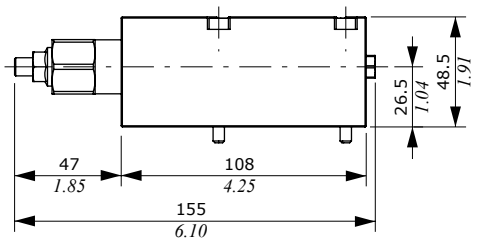

OVN

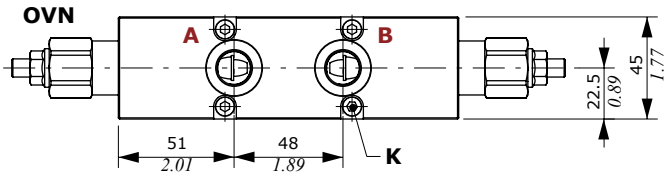

OVN

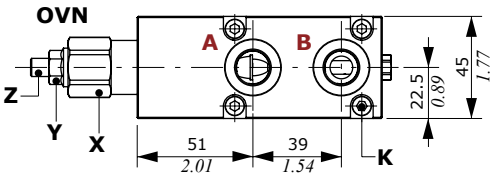

OVR

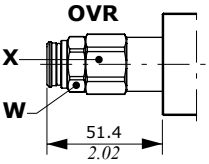

Wrenches and tightening torque

K = allen wrench 4 - 9.8 Nm *(7.2 lbft)*
X = allen wrench 24 - 50 Nm *(37 lbft)*
Y = wrench 13 - 15 Nm *(11 lbft)*
Z = allen wrench 4
W = wrench 22 - 35 Nm *(25.8 lbft)*

OVR

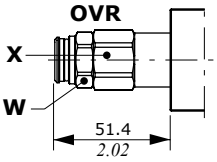

OVV

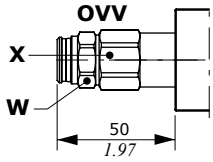

OVN301 type

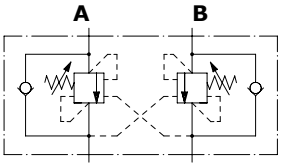

OVR301 type

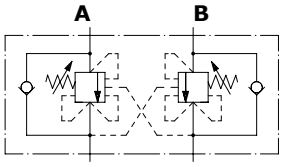

OVR101 type

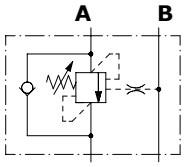

OVR101 type

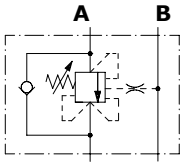

OVV101 type

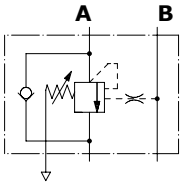

OVN201 type

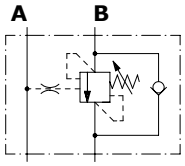

OVR201 type

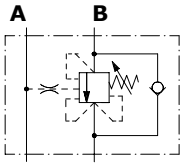

OVV201 type

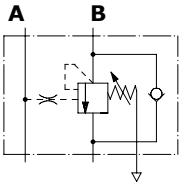

Ordering codes

TYPE	CODE	DESCRIPTION
Single counterbalance valves		
OVN101	1515322100	On port A, load sensitive, pilot ratio = 4
OVN201	1515322100	As previous, on ports B
OVR101	1515422100	On port A, relief compens., pilot ratio = 4
OVR201	1515422100	As previous, on ports B
OVV101	1515522100	On port A, vented type, pilot ratio = 4
OVV201	1515522100	As previous, on port B
Double counterbalance valves		
OVN301	1555222100	Load sensitive, pilot ratio = 4
OVR301	1555322100	Relief compensated, pilot ratio = 4

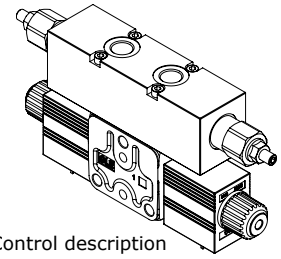

Control description
8ES3B180

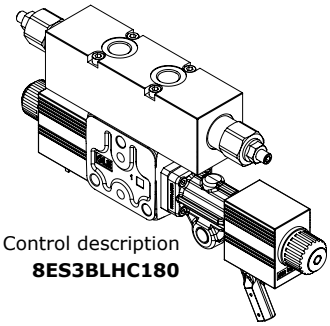

Control description
8ES3BLHC180

Counterbalance valves pressure drop

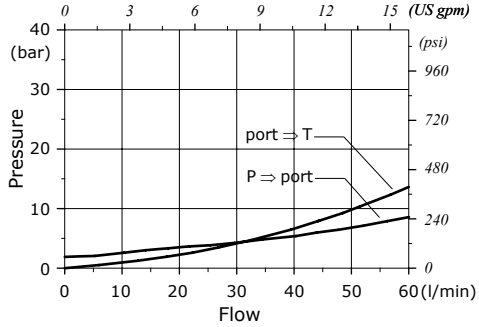

Outlet section

Dimensions and hydraulic circuit

Without port arrangement

RF type

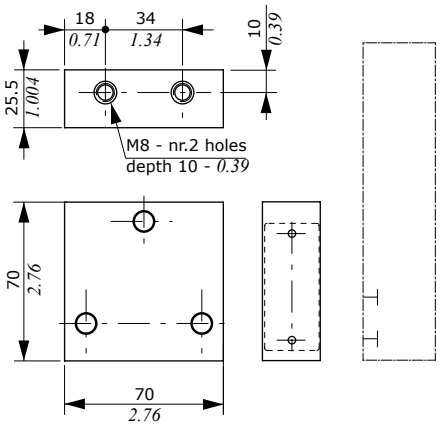

With port arrangement

RS - RP - RT types
drawing shows RS type

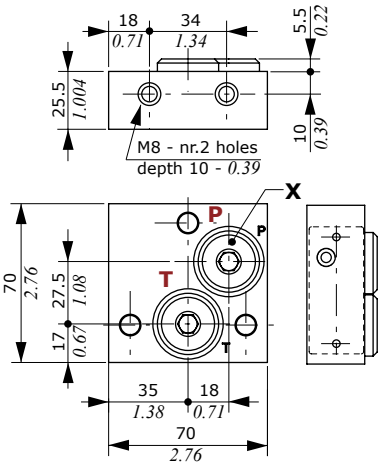

RSB - RPB - RTB types
drawing shows RS type

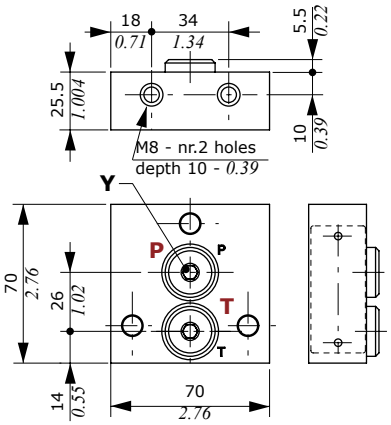

Wrenches and tightening torque
X = allen wrench 8 - 24 Nm *(17.7 lbft)*
Y = allen wrench 6 - 24 Nm *(17.7 lbft)*

RS-RSB types
P and T ports plugged

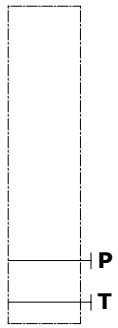

RP-RPB types
P open, T plugged

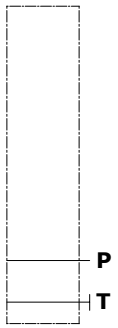

RT-RTB types
T open, P plugged

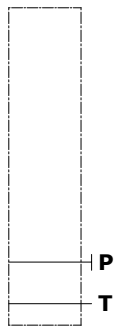

Accessories

Coils and connectors

Application on	Coil type	Voltage	Connectors: ISO4400	Deutsch DT	AMP JPT	Packard Weatherpack	Packard Metri-pack	Flying leads (without connector)
Solenoid operated unloading valve Solenoid operated check valve	BER	**10 VDC**	4SLE001000A	-	-	-	-	-
		12 VDC	4SLE001200A 4SLE001217A(3)	4SLE001201A(5) 4SLE001209A(3-4) 4SLE001202A(5) 4SLE001216A(3-5) 4SLE001206A(2)	4SLE001203A(4) 4SLE001211A(3-4)	4SLE001210A(2)	4SLE001214A(2)	4SLE001207A
		14 VDC	-	4SLE001400A(5) 4SLE001401A(3-5) 4SLE001402A(3-4)	4SLE001403A(3-4)	-	-	-
		24 VDC	4SLE002400A 4SLE002408A(3) 4SLE302400A(1)	4SLE002401A(4) 4SLE002407A(3-4) 4SLE002402A(5)	4SLE002403A(4)	-	-	4SLE002404A
		28 VDC	-	4SLE002802A(5)	4SLE002800A(4)	-	-	-
		48 VDC	4SLE004800A 4SLE304800A(1)	-	-	-	-	-
		110VDC	4SLE011000A 4SLE311000A(1)	-	-	-	-	-
		220 VDC	4SLE022000A 4SLE322000A(1)	-	-	-	-	-
Pressure compensated flow control valve	BQP19	**12VDC**	4SL5000126A	4SL5000125A(5)	4SL5000129A(4)	-	-	-
		24VDC	4SL5000245A	4SL5000244A(5)	4SL5000248A(4)	-	-	-
	BH	**12VDC**	4SLD001200A	4SLD001201A(5)	4SLD001202A(4)	-	-	4SLD001203A
		24VDC	4SLD002400A	4SLD002401A(5)	4SLD002402A(4)	-	-	4SLD002403A
Controls	D12C	**10,5VDC**	4SOL412011-C	-	-	-	-	-
		12VDC	4SOL412012-C	4SOL412013-C(5) 4SOL412112-C(2)	4SOL412014-C(4)	-	-	4SOL412019-C
		24VDC	4SOL412024-C	4SOL412025-C(5)	4SOL412026-C(5)	-	-	-
	D15C	**12VDC**	4SOL515012-C	4SOL515014-C (3-5)	-	-	-	4SOL515019-C 4SOL515020-C(3)
		14VDC	-	-	4SOL515016A-C(4)	-	-	-
		24VDC	4SOL515024-C	4SOL515025-C (3-5)	-	-	-	-

Notes: (1) supply with AC and use only with rectifier connector - (2) with flying leads - (3) with bidirectional diode - (4) integrated perpendicular type - (5) integrated parallel type

BQP19 type

ISO4400 connector

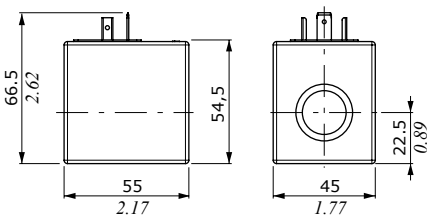

DEUTSCH DT04 connector

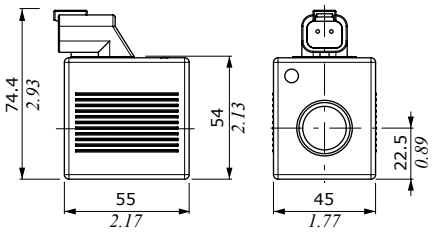

AMP JPT connector

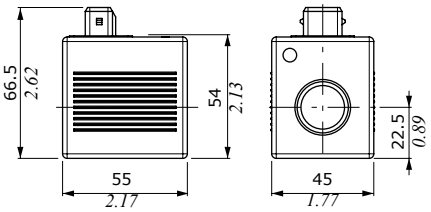

Features

Nominal voltage tolerance : ±10%
Power rating . . . . . : 15 W @ 12 VDC
: 15 W @ 24 VDC
Max. operating current . . : 1.25 A @ 12 VDC
: 0.63 A @ 24VDC
Coil insulance . . . . . : Class H
(180°C - *356°F*)
Weather protection . . . . . : IP65 - ISO4400
: IP69K - Deutsch DT
: IP65 - AMP JPT
Insertion . . . . . : 100%

Coils and connectors

BH type

ISO4400 connector

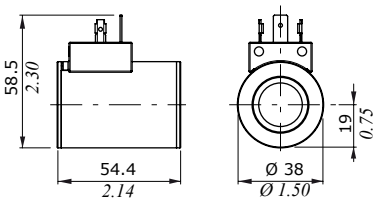

DEUTSCH DT04 connector

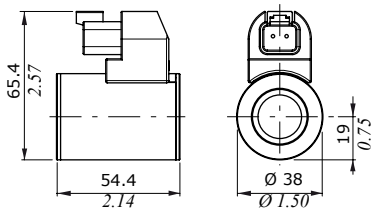

AMP JPT connector

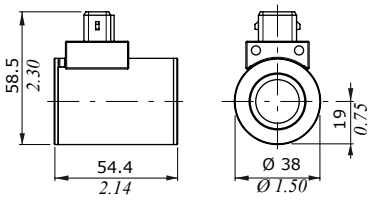

Flying leads

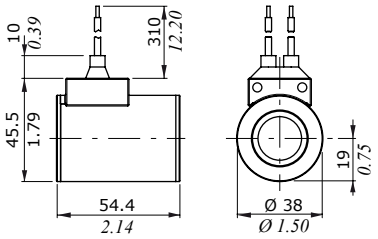

Features

Nominal voltage tolerance . : ±10%
Power rating . . . . . : 33 W - 12/24 VDC
Max. oper. current (on/off). : 2.75 A - 12 VDC
: 1.38 A - 24 VDC
Max. prop. control current . : 1.7 A - 12 VDC
: 0.85 A - 24 VDC
Coil insulance . . . . . : Class H
(180°C - *356°F*)
Weather protection . . . . . : IP65 - ISO4400
: IP69K -Deutsch DT
: IP65 - AMP JPT
Insertion . . . . . : 100%

BER type

ISO4400 connector

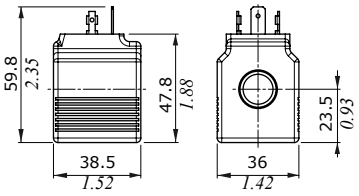

DEUTSCH DT04 connector
(perpendicular type)

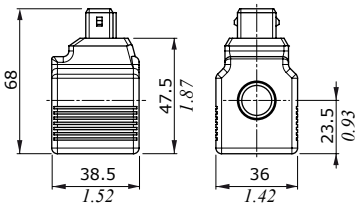

DEUTSCH DT04 connector
(parallel type)

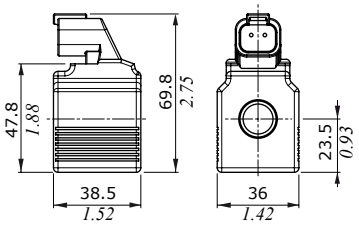

AMP JPT connector

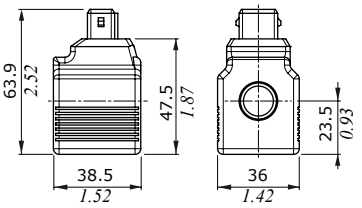

Features

Nominal voltage tolerance : ±10%
Power rating . . . . . : 19.2 W @ 10/12/24/48/
110/220 VDC
: 19 W @ 24/110/220 RAC
: 19.2 W @ 48 RAC
Max. operating current . . : 1.9 A @ 10 VDC
: 1.61 A @ 12 VDC
: 0.80 A @ 24 VDC
: 0.40 A @ 48 VDC
: 0.17 A @ 110 VDC
: 0.09 A @ 220 VDC
: 0.89 A @ 24 RAC
: 0.45 A @ 48 RAC
: 0.19 A @ 110 RAC
: 0.09 A @ 220 RAC
Coil insulance . . . . . : Class H (180°C - *356°F*)
Weather protection . . . . . : IP65 - ISO4400
: IP69K - Deutsch DT
: IP65 - AMP JPT
: IP67 - Weatherpack
: IP67 - Metri-pack
Insertion . . . . . : 100%

Flying leads

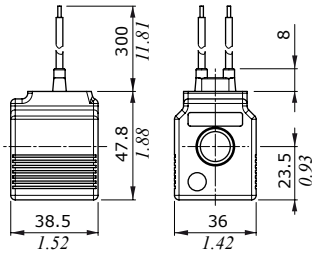

Flying leads with DEUTSCH DT04 connector

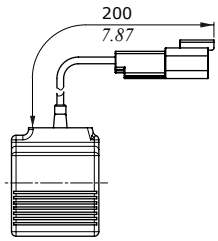

Flying leads with PACKARD WEATHER-PACK connector

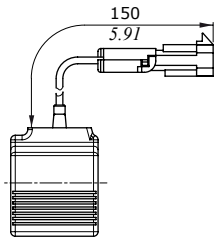

Flying leads with PACKARD METRI-PACK connector

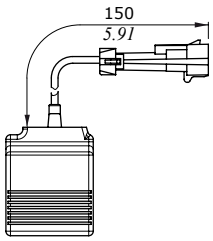

Accessories

Coils and connectors

D12C type

ISO4400 connector

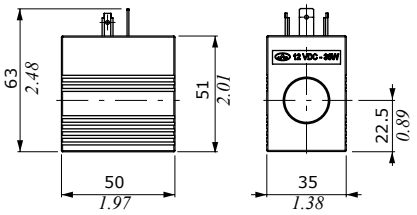

DEUTSCH DT04 connector

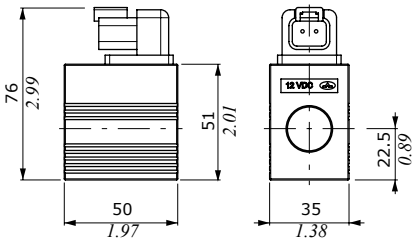

Features

Nominal voltage tolerance : ±10%
Power rating. . . . . .: 36 W @
. . . . . .: 10.5/12/24 VDC
Max. operating current . .: 3.43 A @ 10.5 VDC
: 3 A @ 12 VDC
: 1.5 A @ 24VDC
Coil insulance . . . . . .: Class H (180°C - *356°F*)
Weather protection . . . . .: IP65 - ISO4400
: IP69K - Deutsch DT
: IP65 - AMP JPT
Insertion . . . . . .: 100%

Flying leads

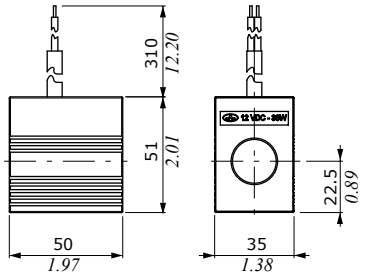

Flying leads with DEUTSCH DT04 connector

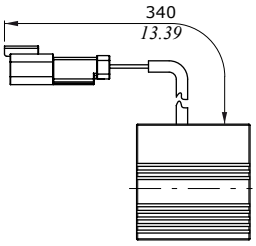

AMP JPT connector

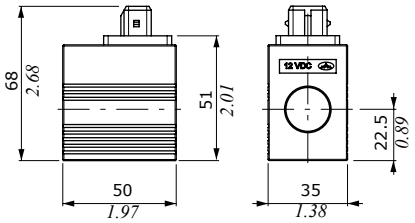

D15C type

ISO4400 connector

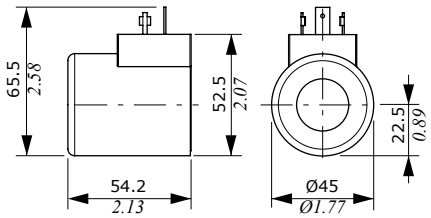

DEUTSCH DT04 connector

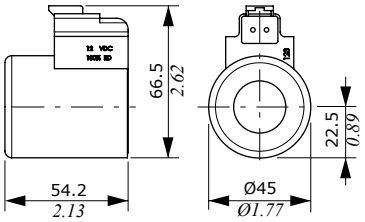

Features

Nominal voltage tolerance : ±10%
Power rating. . . . . .: 38 W @
12/14/24/ VDC
Max. operating current . .: 3.16 A @ 12 VDC
: 2.75 A @ 14VDC
: 1.58 A @ 24VDC
Coil insulance . . . . . .: Class H
(180°C - *356°F*)
Weather protection . . . . .: IP65 - ISO4400
: IP69K - Deutsch DT
: IP65 - AMP JPT
Insertion . . . . . .: 100%

Flying leads

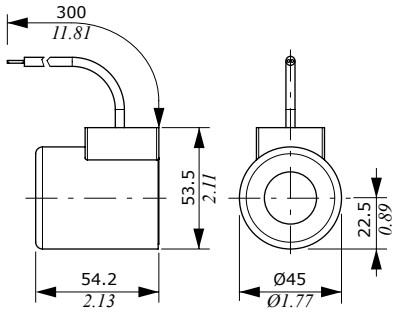

AMP JPT connector

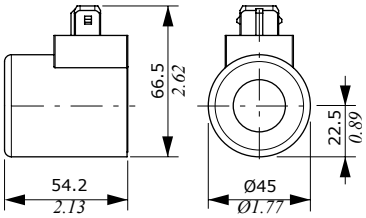

Fixing brackets

SDE030

Dimensions (*) are referred to directional valve with N1 type inlet section.

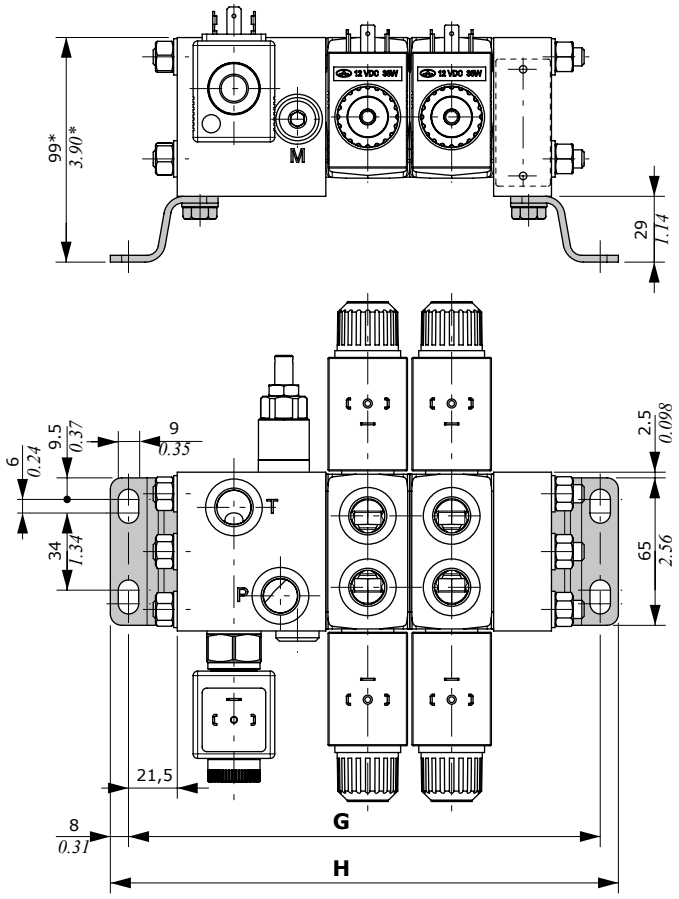

TYPE	with section N type				with sections N1-N2-N6-N7 type			
	G		H		G		H	
	mm	*in*	mm	*in*	mm	*in*	mm	*in*
SDE030/1	134	*5.28*	150	*5.91*	171	*6.73*	187	*7.36*
SDE030/2	171	*6.73*	187	*7.36*	208	*8.19*	224	*8.82*
SDE030/3	208	*8.19*	224	*8.82*	245	*9.65*	261	*10.28*
SDE030/4	245	*9.65*	261	*10.28*	282	*11.10*	298	*11.73*
SDE030/5	282	*11.10*	298	*11.73*	319	*12.56*	335	*13.19*
SDE030/6	319	*12.56*	335	*13.19*	356	*14.02*	372	*14.65*
SDE030/7	356	*14.02*	372	*14.65*	393	*15.47*	409	*16.10*
SDE030/8	393	*15.47*	409	*16.10*	430	*16.93*	446	*17.56*
SDE030/9	430	*16.93*	446	*17.56*	467	*18.39*	483	*19.02*
SDE030/10	467	*18.39*	483	*19.02*	504	*19.84*	520	*20.47*

Accessories

Fixing brackets

SDE060

Dimensions (*) are referred to directional valve with N1 type inlet section.

On valve for 60 l/min *(15.8 US gpm)* flow rate

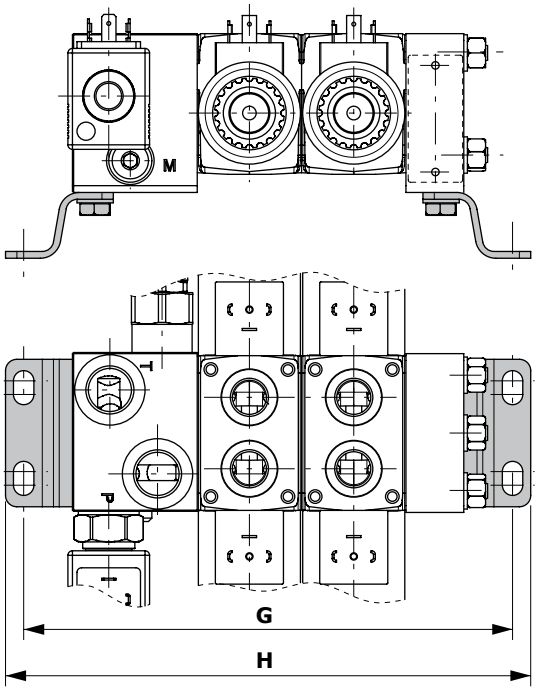

On valve for 30 l/min *(7.9 US gpm)* flow rate

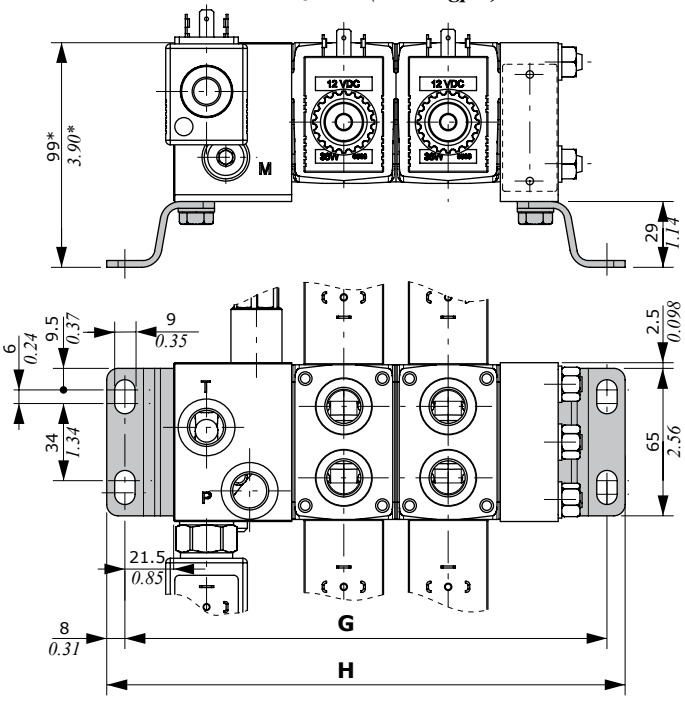

Valve for 60 l/min *(15.8 US gpm)* flow rate

TYPE	with section N type				with section N1 type				with section N2 type			
	G		H		G		H		G		H	
	mm	*in*	mm	*in*	mm	*in*	mm	*in*	mm	*in*	mm	*in*
SDE060/1	147.5	*5.81*	163.5	*6.44*	169.5	*6.67*	185.5	*7.30*	200	*7.87*	216	*8.50*
SDE060/2	193.5	*7.62*	209.5	*8.25*	215.5	*8.48*	231.5	*9.11*	246	*9.69*	262	*10.31*
SDE060/3	239.5	*9.43*	255.5	*10.06*	261.5	*10.29*	277.5	*10.93*	292	*11.50*	308	*12.13*
SDE060/4	285.5	*11.24*	301.5	*11.87*	307.5	*12.11*	323.5	*12.74*	338	*13.31*	354	*13.94*
SDE060/5	331.5	*13.05*	347.5	*13.68*	353.5	*13.92*	369.5	*14.55*	384	*15.12*	400	*15.75*
SDE060/6	377.5	*14.86*	393.5	*15.49*	399.5	*15.73*	415.5	*16.36*	430	*16.93*	446	*17.56*
SDE060/7	423.5	*16.67*	442.5	*17.42*	445.5	*17.54*	461.5	*18.17*	476	*18.74*	492	*19.37*
SDE060/8	469.5	*18.48*	485.5	*19.11*	491.5	*19.35*	507.5	*19.98*	522	*20.55*	538	*21.18*
SDE060/9	515.5	*20.30*	531.5	*20.93*	537.5	*21.16*	553.5	*21.79*	568	*22.36*	584	*22.99*
SDE060/10	561.5	*22.11*	577.5	*22.74*	583.5	*22.97*	599.5	*23.60*	614	*24.17*	630	*24.80*

Valve for 30 l/min *(7.9 US gpm)* flow rate

TYPE	with section NB type				with section N1B type				with section N2B type				with sections N6B-N7B type			
	G		H		G		H		G		H		G		H	
	mm	*in*	mm	*in*	mm	*in*	mm	*in*	mm	*in*	mm	*in*	mm	*in*	mm	*in*
SDE060/1	143	*5.63*	159	*6.26*	164.5	*6.48*	180.5	*7.11*	191	*7.52*	207	*8.15*	183.5	*7.22*	199.5	*7.85*
SDE060/2	189	*7.44*	205	*8.07*	210.5	*8.29*	226.5	*8.92*	237	*9.33*	253	*9.96*	229.5	*9.04*	245.5	*9.66*
SDE060/3	235	*9.25*	251	*9.88*	256.5	*10.10*	272.5	*10.73*	283	*11.14*	299	*11.77*	275.5	*10.85*	291.5	*11.48*
SDE060/4	281	*11.06*	297	*11.69*	302.5	*11.91*	318.5	*12.54*	329	*12.95*	345	*13.58*	321.5	*12.66*	337.5	*13.29*
SDE060/5	327	*12.87*	343	*13.50*	348.5	*13.72*	364.5	*14.35*	375	*14.76*	391	*15.39*	367.5	*14.47*	383.5	*15.10*
SDE060/6	373	*14.69*	389	*15.31*	394.5	*15.53*	410.5	*16.16*	421	*16.57*	437	*17.20*	413.5	*16.28*	429.5	*16.91*
SDE060/7	419	*16.50*	435	*17.13*	440.5	*17.34*	456.5	*17.97*	467	*18.39*	483	*19.02*	459.5	*18.09*	475.5	*18.72*
SDE060/8	465	*18.31*	481	*18.94*	486.5	*19.15*	502.5	*19.78*	513	*20.20*	529	*20.83*	505.5	*19.90*	521.5	*20.53*
SDE060/9	511	*20.12*	527	*20.75*	532.5	*20.96*	548.5	*21.59*	559	*22.01*	575	*22.64*	551.5	*21.71*	567.5	*22.34*
SDE060/10	557	*21.93*	573	*22.56*	578.5	*22.76*	594.5	*23.41*	605	*23.82*	621	*24.45*	597.5	*23.52*	613.5	*24.15*

The SDE060-SDE030 valves are assembled and tested as per the technical specifications of this catalogue.
Before the final installation on your equipment, kindly follow the recommendations below:

- the valves can be assembled in any position; in order to prevent body deformation and spool sticking, mount the products on a flat surface;
- In order to prevent the possibility of water entering into the spool control kit, do not use high pressure wash down directly on the valves;
- Before painting, ensure plastic port plugs are tightly in their place.

Fittings tightening torque (Nm-*lbft*)

SDE030			
THREAD TYPE	**P-T ports**	**A-B ports**	**M-LS ports**
BSP	G 3/8	G 3/8	G 1/4
With O-Ring seal	35 - *25.8*	35 - *25.8*	25 - *18.4*
With copper washer	40 - *29.5*	40 - *29.5*	30 - *22*
With steel and rubber washer	30 - *22*	30 - *22*	16 - *11.8*
UN-UNF	3/4-16 (SAE 8)	9/16-18 (SAE 6)	7/16-20(SAE 4) 9/16-18 (SAE 6)**
With O-Ring seal	35 - *25.8*	30 - *22*	18-*13.3* • 30**-*22***

SDE030

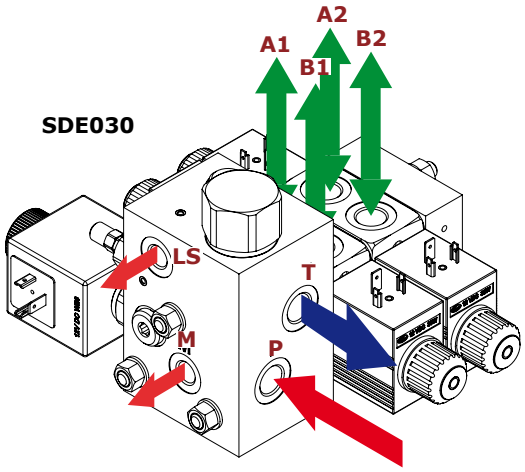

SDE060
30 l/min *(7.9 US gpm)*

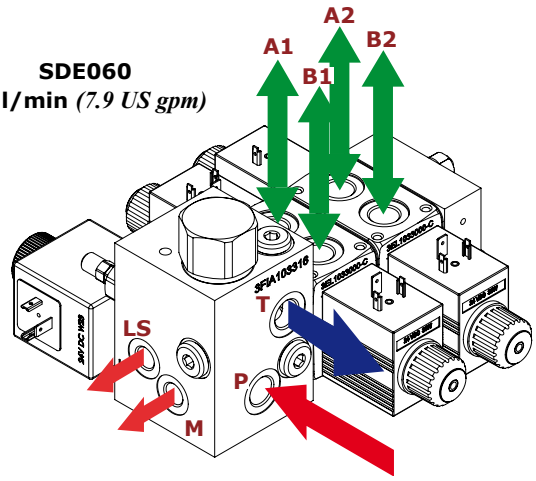

SDE060
60 l/min *(15.8 US gpm)*

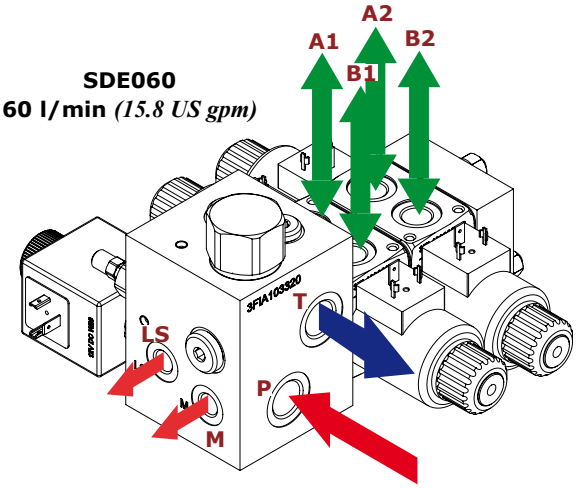

SDE060						
THREAD TYPE	**Section for 30 l/min** *(7.9 US gpm)*			**Section for 60 l/min** *(15.8 US gpm)*		
	P-T ports	**A-B ports**	**M-LS ports**	**P-T ports**	**A-B ports**	**M-LS ports**
BSP	G 3/8	G 3/8	G 1/4	G 1/2	G 3/8 • G 1/2*	G 1/4
With O-Ring seal	35 - *25.8*	35 - *25.8*	25 - *18.4*	50 - *37*	35-*25.8* • 50*-*37**	25 - *18.4*
With copper washer	40 - *29.5*	40 - *29.5*	30 - *22*	60 - *44.3*	40-*29.5* • 60*-*44.3**	30 - *22*
With steel and rubber washer	30 - *22*	30 - *22*	16 - *11.8*	60 - *44.3*	30-*22* • 60*-*44.3**	16 - *11.8*
UN-UNF	3/4-16 (SAE 8)	9/16-18 (SAE 6)	7/16-20(SAE 4) 9/16-18 (SAE 6)**	3/4-16 (SAE 8)	9/16-18 (SAE 6) 3/4-16 (SAE 8)**	7/16-20 (SAE 4) 9/16-18 (SAE 6)**
With O-Ring seal	35 - *25.8*	30 - *22*	18-*13.3* • 30**-*22***	35 - *25.8*	30-*22* • 35**-*25.8***	18-*13.3* • 30**-*22***

NOTE – *These torques are recommended. Assembly tightening torque depends on many factors, including lubrication, coating and surface finishing. The manufacturer must be consulted.*

Installation and maintenance

Malfunction	Cause	Remedy
External leakage from electric control	Control spool seal due to mechanical wear.	Replace the seal.
Excessive internal leakage on A and B ports.	Increase clearance between spools and body due to high wear.	Replace the directional control valve and check the oil contamination level.
Inability to build pressure on A and B	Main pressure relief valve blocked open.	Remove, clean or replace the main relief valve.
	Port relief valve open.	Remove, clean or replace the port relief valve.
	Low pump pressure and flow.	Check the pump and the circuit.

4th edition March 2017

WWW.WALVOIL.COM

D1WWEB04E

walvoil
FLUID POWER E|MOTION