DIRECTIONAL CONTROL VALVES

www.dynexhydraulics.com

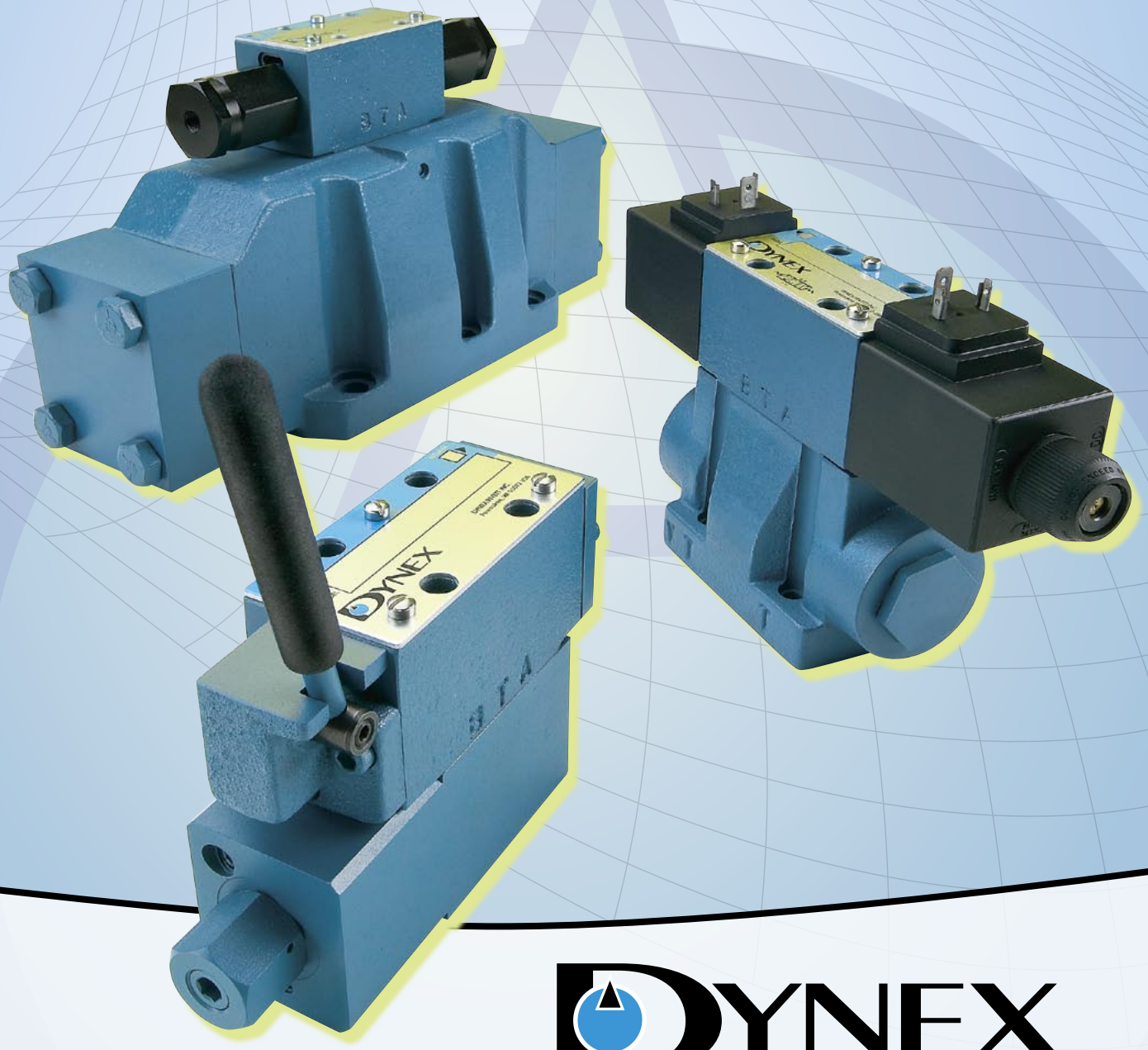

DYNEX
High Pressure Hydraulics

Valves for Improved Performance in Demanding Applications

Aerospace Testing Requires High Pressure and Special Fluids

Dynex valves provide reliable shifting with extended life on R & D and production test stands. Pressure capability to 10 000 psi (700 bar) and compatibility with various water-based, phosphate ester and MIL-SPEC fluids makes these valves ideal for testing components used on commercial and military aircraft.

Photo Copyright © Boeing

Valve Manifolds Facilitate Lighter, More Efficient Drill Rigs

Rotary drill rigs use Dynex manifold-mounted valves to control the propel, feed-hoist and rotation circuits. The advanced hydraulic system improves operator control, eliminates high-pressure lines in the cab, and reduces connections for neater appearance, easier assembly and servicing.

High-Pressure Spool Valves Control High-Torque Wrenches

Portable hydraulic power packs use Dynex HP directional control valves at pressures to 10 000 psi (700 bar). A simple, sliding-spool design eliminates complex valve circuits for four-way control in high pressure circuits. A full range of actuators, spools and electrical options is available.

High-Pressure Operation on Tunneling Equipment

Dynex HP directional valves control cylinder movement on high-force pipe jacking equipment. The valves operate at pressures to 10 000 psi (700 bar), with reliable shifting in difficult, dirty conditions.

USING THIS BROCHURE

This brochure contains specifications for Dynex directional control valves. Subplates and bolt kits are listed in the section for each specific valve model.

For subplate installation drawings, refer to separate Bulletin VES.SP.

Brochure Notes

Specifications shown were in effect when printed. Since errors or omissions are possible, contact your sales representative or the sales department for the most current specifications before ordering.

Dynex reserves the right to discontinue products or change designs at any time without incurring any obligation.

Table of Contents

Dynex Model – Mounting Pattern	Page
Subplate Mounted Spool Valves	
Internal Operators and Spool Descriptions	4
Application and Electrical Data	6
D03 – N.F.P.A. D03 (CETOP 3)	9
HP03 – High Pressure, Special Mounting Pattern	14
D05 – N.F.P.A. D05 (CETOP 5)	20
HP05 – High Pressure, Special Mounting Pattern	25
D05H – Modified N.F.P.A. D05 High Flow Pattern	30
D08 – N.F.P.A. D08 (CETOP 8)	34
D08H – Modified N.F.P.A. D08 High Flow Pattern	39
Subplate Mounted Seated Valves	
VST Series – HP03 Special Mounting Pattern	43
High Pressure Sandwich Accessory Valves	
VSW Series – HP03 and HP05 Special Mounting Pattern	48

SMOOTH FLOW CONTROL AT PRESSURES TO 15 000 PSI

Dynex directional control valves provide a combination of high performance, efficiency and reliable operation.

N.F.P.A. (CETOP) Pattern Valves

Subplate mounted valves operate at pressures to 5000 psi (350 bar). The valves provide low pressure drop, with large internal flow passages with uniform flow areas. High-force springs and solenoids, and tank return hydraulic boost passageways ensure reliable shifting. A four-land design provides smooth, balanced spool movement.

10 000 psi HP Series Spool Valves

Simple sliding-spool valves eliminate complex valve circuits for four-way control in high pressure systems. A full range of actuators, spools and electrical options are available.

Seated Valves Operate to 15 000 psi

VST valves provide high pressure venting or directional control. The ball-on-seat design eliminates silting for reliable shifting, even when unactuated for long periods at high pressure. Positive sealing makes them ideal for load holding functions.

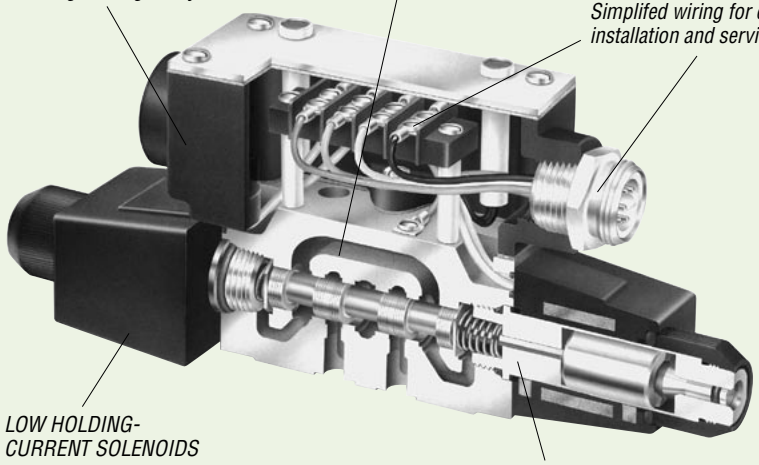

Convenient Lever Operation

Four handle positions on either end of valve allow convenient operator location. In-the-field changes are easy.

Explosion Proof Option

Solenoids with special enclosures are approved by UL and CSA for use in hazardous locations.

High-Pressure Sandwich Valves

VSW Series accessory valves simplify circuits and reduce installation costs. The valves mount under Dynex HP pattern control valves. This compact package reduces costs and assembly time with less piping and fittings.

INTERNAL OPERATORS

The table at right shows available internal operators and the most common spools. To specify, refer to "Typical Model Code" for the specific valve model.

Contact the Dynex sales department for availability of spool options not shown.

The function symbols in the table show solenoid or lever actuated models, as reference. Air or hydraulic actuators are also available.

Flow pattern in the center position or during crossover is determined by the spool selected. Refer to Spool Descriptions on page 5.

Flow Actuating Pattern

Operating actuator "A" opens flow path to port "A" (P→A). Operating actuator "B" opens flow path to port "B" (P→B). The exception are models with Code 6 operators, which are actuator centered.

Spring-centered or spring-offset models are spring positioned unless actuated.

Code 3 operators (two position detented) hold the spool in the last actuated position. These valves can be actuated momentarily (minimum electrical signal duration, 50 ms) to shift and hold the spool in that position.

SPOOL SELECTION

As shown in the table on page 5, identification of spools for the same function differs, depending on whether the valve is direct or pilot-operated.

Not all spool types are available for every valve size and with every internal operator. Refer to the "Typical Model Code" for each specific model.

High pressure valves with HP03 and HP05 patterns, use Type 20 and 21 spools for models with Code 1 and Code 2 internal operators. The exception are manual lever HP03 models, which use Type 0 and 1 spools.

Type 0 and 1 spools provide the same function, but can not be interchanged with Type 20 or 21 spools.

Valve Operator Descriptions

Internal Operator Code	Actuator, Operation	Spool Types: D03 D05	HP03	HP05	D05H D08 D08H	Operator Function: Non-Actuated	Actuated	Function Symbol①
1	Single Actuator, Two Position	0 or 1	20 or 21②	20 or 21②	5 or 6	P→B	P→A	
		03	–	–	–	P→B	P→A	
2	Single Actuator, Two Position	0 or 1	20 or 21②	20 or 21②	5 or 6	P→A	P→B	
		03	–	–	–	P→A	P→B	
3	Single Actuator, Two Position③	0 or 1	0 or 1	0 or 1	5 or 6	Detented in Actuated Positions	P→A or P→B	
		03	03	–	–	Detented in Actuated Positions	P→A or P→B	
	Lever Actuator, Three Position③	All Spools	All Spools	–	All Spools	Detented in Actuated Positions	P→A or P→B	
4	Single Actuator, Two Position④	03	03	–	–	Spring Centered	P→A	
		011	011	–	56 or 58	Spring Centered	P→B	
		0, 1 or 3	0, 1 or 3	0, 1 or 3	5, 6 8 or 9	Spring Centered	P→A	
5	Double Actuator, Three Position	All Spools	All Spools	All Spools	All Spools	Spring Centered	P→A or P→B	
6⑤	Single Actuator, Two Position④	03	03	–	–	P→B	Centered	
		011	011	–	–	P→A	Centered	
		0, 1 or 3	0, 1 or 3	0, 1 or 3	–	P→B	Centered	
7	Lever Actuator, Two Position⑥	0 or 1	0 or 1	–	–	Detented in Actuated Positions	P→A or P→B	

① *Symbols show solenoid or lever actuated models, as reference. Air or hydraulic actuators are also available.*
② *Type 20 and 21 spools are used for HP03 and HP05 model valves with Code 1 and Code 2 internal operators (except manual lever HP03 models which use Type 0 and 1 spools).*
③ *Code 3 operators with solenoid, hydraulic or air-piloted actuators provide two position operation. Manual lever operated models provide three position operation.*
④ *Flow can be reversed with "R" option (i.e., with "R" in model code, Code 4 operator will direct flow to port "B" [P→B] in the actuated position).*
⑤ *Code 6 operators not available with manual lever operated models.*
⑥ *Code 7 operators only available for manual lever operated D03, HP03 and D05 models.*

Spool Descriptions

Spool Symbol	Crossover Function	Description of Spool Function	Spool Type: D03, HP03, D05, HP05	Spool Type: D05H, D08, D08H
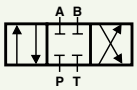	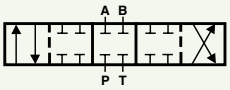	Closed center spool. All ports blocked in center position.	0, 20①	5
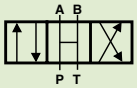	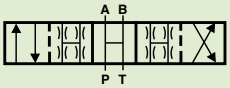	Open center spool. All ports connected in center position. Allows fluid motors or cylinders to move when de-energized. Minimum shock during crossover.	1, 21①	6
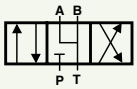	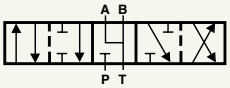	Pressure port blocked in center position. Both cylinder ports connected to tank.	3	8
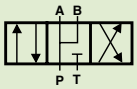	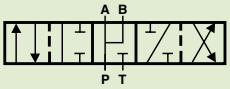	Cylinder ports pressurized in center position, tank port blocked. Used for a differential circuit with single rod cylinder. Prevents motor cavitating when decelerating. Reduces crossover shock.	4	9②
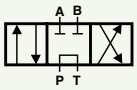	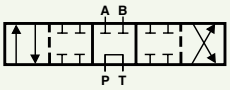	Tandem center spool. Cylinder ports blocked, pressure connected to tank in center position with closed crossover. During transition from center to offset position, all ports are closed	01③④	56
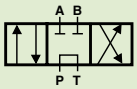	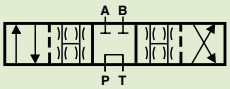	Tandem center spool, as noted for Type 01 and 56 spools, but with open crossover. During transition from center to offset position, all ports are interconnected to eliminate shock in the system.	011⑤	58
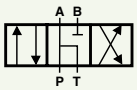	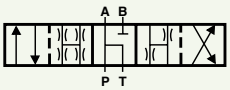	Open center spool with cylinder port B blocked and cylinder port A open to pressure and tank in the center position.	2④	–
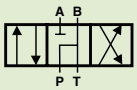	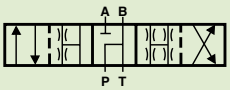	Open center spool with cylinder port A blocked and cylinder port B open to pressure and tank in the center position.	2R④	–
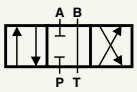	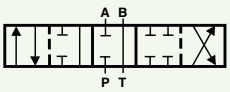	Pressure port blocked with cylinder port A blocked, cylinder port B connected to tank in center position. This blocks a cylinder or motor in one direction and blocks the pressure port.	32④	–
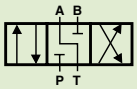		Pressure port blocked with cylinder port B blocked, cylinder port A connected to tank in center position. This blocks a cylinder or motor in one direction and blocks the pressure port.	32R④	–
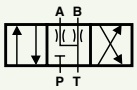	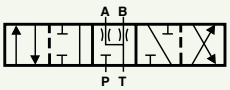	Pressure port blocked in center position. Cylinder ports partially restricted and connected to tank.	36④	–
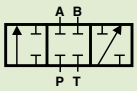	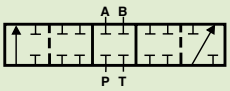	Closed center spool. All ports blocked in the center position. Tank port blocked in all positions.	03⑥	–

① *Type 20 and 21 spools must be specified for HP03 and HP05 model valves with Code 1 or Code 2 internal operators (except manual lever HP03 models which use Type 0 and 1 spools). Type 20 and 21 spools provide the same function, but are not interchangeable with Type 0 or 1 spools.*

② *Type 9 spool not available for D08H model valves.*

③ *Type 01 spool not available for D03 and HP03 model valves.*

④ *Not available for HP05 model valves.*

⑤ *Type 011 spool not available for D05 and HP05 model valves.*

⑥ *Type 03 spool available for D03 and HP03 model valves only.*

APPLICATION NOTES

Electrical Data

The tables list electrical specifications for Dynex directional valves.

D03 and HP03 valves use the same solenoids. High flow D05H, D08 and D08H valves also use this solenoid, with the D03 valve serving as a pilot valve.

D05, HP05 and VST valves use the same larger solenoid.

Mounting Position

Unrestricted for all valves.

Manual Operated Valves

Lever operated models provide a choice of four positions on either port "A" end or port "B" end of valve.

To specify handle orientation, see "Typical Model Code" for the specific valve model.

Standard Seals

All valves use Fluorocarbon (Viton® or equivalent) o-rings, providing greater fluid compatibility and improved temperature range performance.

Fluid Recommendations

50 to 1500 SUS (7 to 323 cSt) viscosity; -20° to 200° F (-29° to +93° C) temperature range.

Recommended Filtration

Use filtration to provide fluid which meets these ISO Code 4406 cleanliness values:

Standard N.F.P.A. (CETOP) Patterns, 18/16/13 to 5000 psi (350 bar);

HP03 and HP05 Patterns, 18/16/13 to 5000 psi (350 bar), 17/15/12 higher than 5000 psi (350 bar);

VST Series Seated Valves, 20/18/15.

Adequate filtration is critical for spool valves held in one position for long periods under pressure. Silting may cause spool valves to stick and not shift properly. Valves should also be cycled periodically.

Pressure Surges

Consistent with standard practice, the system must be protected from pressure surges which can affect the shifting of any spool valve. In systems with multiple valves, a separate line to tank, or to another low pressure line, is recommended. This is especially critical with detented models.

Electrical Data – D03, HP03, D05H, D08 and D08H Valves

Solenoid Code①	Input Voltage (Volts)	Frequency (Hz)	Inrush Current (Amps)	Holding Current (Amps)	Holding Power (Watts)	Coil Resistance (Ohms + 10%)
24DF (Dual Frequency)	24 AC	50	9.50	2.60	27	1.67
	24 AC	60	8.60	1.75	22	1.67
115DF (Dual Frequency)	110 AC	50	1.65	0.47	23	44.2
	115 AC	60	1.55	0.40	20.5	44.2
230DF (Dual Frequency)	220 AC	50	0.86	0.22	23	150
	230 AC	60	0.80	0.18	20.5	150
460DF (Dual Frequency)	440 AC	50	0.41	0.13	23	600
	460 AC	60	0.40	0.10	21	600
12DC	12 DC	–	–	–	28	5.10
24DC	24 DC	–	–	–	28	20.60
12EP	12 DC	–	–	–	33	4.36
24EP	24 DC	–	–	–	33	17.50
110EP	110 AC	50	1.86	0.54	23	35.20
115EP	115 AC	60	1.90	0.50	23	33.50

① *Ordering codes listed are for standard wire leads. Plug-in Terminal solenoids ("Hirschmann" type) are also avaialble. See "Typical Model Code" for the specific valve model.*

Electrical Data – D05, HP05 and VST Valves

Solenoid Code①	Input Voltage (Volts)	Frequency (Hz)	Inrush Current (Amps)	Holding Current (Amps)	Holding Power (Watts)	Coil Resistance (Ohms + 10%)
24DF (Dual Frequency)	24 AC	50	23.00	4.10	38	0.56
	24 AC	60	21.00	3.15	38	0.56
115DF (Dual Frequency)	110 AC	50	4.80	0.88	37	10.20
	115 AC	60	4.30	0.72	35	10.20
230DF (Dual Frequency)	220 AC	50	2.40	0.44	37	40.80
	230 AC	60	2.20	0.36	35	40.80
460DF (Dual Frequency)	440 AC	50	1.30	0.23	37	188.50
	460 AC	60	1.20	0.20	35	188.50
12DC	12 DC	–	–	–	48	3.00
24DC	24 DC	–	–	–	48	12.00
250DC	250 DC	–	–	–	48	1300.00
12EP	12 DC	–	–	–	48	3.00
24EP	24 DC	–	–	–	48	12.00
110EP	110 AC	50	4.20	1.00	43	10.72
115EP	115 AC	60	3.90	8.90	43	10.47
220EP	220 AC	50	2.09	0.50	43	43.35

① *Ordering codes listed are for standard wire leads. Plug-in Terminal solenoids ("Hirschmann" type) are also avaialble. See "Typical Model Code" for the specific valve model.*

Drain and Pilot Connections

On pilot operated models, valves are supplied with external drain and internal pilot as standard.

Internal drain and external pilot are optional. See "Typical Model Code" for each valve model. Also refer to the installation drawings, which indicate plug locations for various drain and pilot configurations.

External drain is recommended for applications with high tank pressure, to assure proper spool shifting.

SOLENOID AND ELECTRICAL OPTIONS

Solenoid Advantages

Solenoid models are quiet and moisture resistant for long life. Wet armature design eliminates dynamic seals and increases the available shifting forces. Static o-rings prevent external leakage.

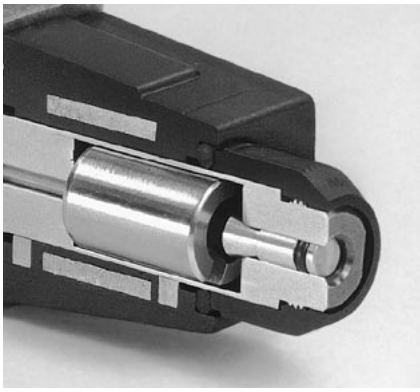

Manual Solenoid Override

Solenoid override pins are made of corrosion-resistant brass for trouble free operation.

The "M" option, shown at right, provides convenient hand-actuated override, without the use of tools.

Refer to "Typical Model Code" on the appropriate page for each specific model.

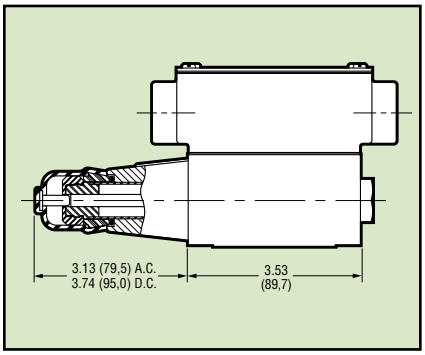

Standard Wire Leads

Standard models include UL listed and CSA approved wire leads. The valves feature large, lightweight wiring boxes, providing a rigid, strong enclosure for electrical connections.

The nameplate retainer helps during installation, keeping the proper nameplate with each valve when wiring multiple valves.

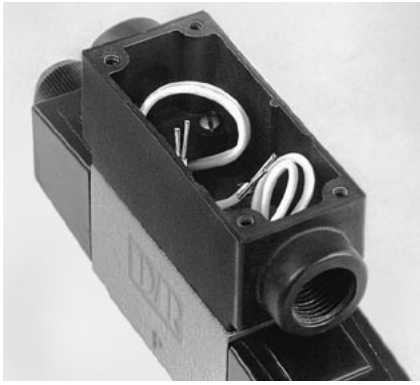

Terminal Strip

Connecting wire leads is easier with this convenient feature. Four sets of common terminal screws let you cut leads to desired length and make simple connections.

Access to the terminals is improved by mounting posts which raise the strip to the top of the box.

To specify terminal strip, include "T" in model code. Also available, with mounting posts and screws, in kit KV00301010.

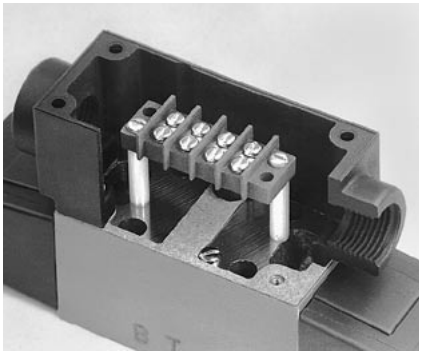

Connectors (3- Or 5-Pin)

Simplify your connections and prevent wiring mistakes with quick-connect pin receptacles (N.F.P.A. standard T3.5.29-1980; A.N.S.I. standard B93.55M-1981).

Valves with these UL recognized and CSA certified connectors can be serviced without disturbing wiring.

Internal valve wiring is complete, with leads connected to a terminal strip in wiring box. All wires have UL and CSA approved solder-less terminals.

Wiring diagrams show the standard connections for 3-pin and 5-pin connectors. The commercially available mating "female" connector is not included.

For installation convenience, valves are available with connector on either end of valve. To specify connectors refer to "Typical Model Code" on the appropriate page for each specific model. The connectors are also available in kit KV00301012 (3-pin) or KV00301013 (5-pin).

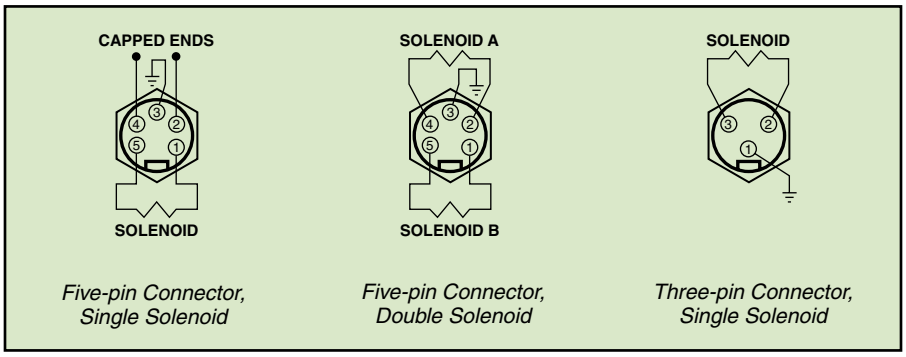

Cable Grip And Lights

Prevent accidental electric disconnection during operation, with this optional grip for .38 to .44 inch (9,5 to 11,1 mm) O.D. machine tool cable. Cable grip is mounted in electric entry, on port "B" end of valve.

Simplify troubleshooting in your systems with bright, neon signal lights. Available in A.C. models only.

To specify cable grip, include "CG" in model code. For lights, include "SL". Also available separately as part number 17650960 (grip) or kit KV00301011 (lights).

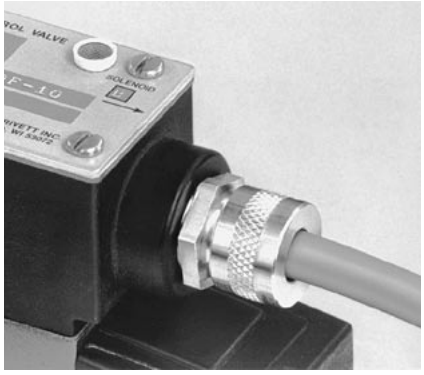

Plug-In Terminal Solenoids

Integral solenoid plugs simplify electrical connections during installation and servicing. Three terminal, bi-polar plugs fit DIN Connector, Standard 43650 Form A ("Hirschmann" type).

Installation is easier because valves can be mounted without removal of nameplate. Openings in nameplate provide access to mounting holes in valve bodies.

Commercially available mating plug is not included.

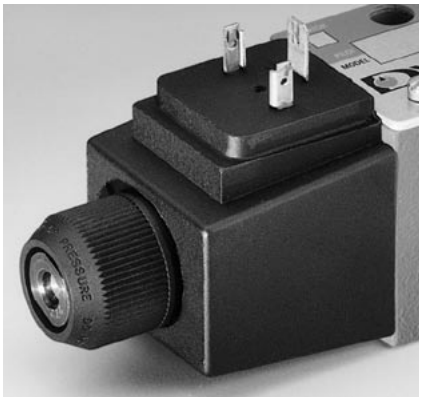

D03 PATTERN

VALVE DESCRIPTION

D03 valves provide high pressure and high flow capability in a very compact size. Flows to 15 gpm (57 L/min) are possible at pressures to 5000 psi (350 bar).

These valves operate very efficiently, with large-core flow passages and uniform flow areas throughout the body coring. Typical pressure drop (open center spool) is a low 98 psi at 8 U.S. gpm (7 bar at 30 L/min) nominal flow.

For a description of spools, internal operators and application information, refer to pages 4-6.

Mounting

Subplate, N.F.P.A. D03 (CETOP 3) pattern.

Actuator Options

6100 Series: Manual Lever;
6500 Series: Direct Solenoid;
6800 Series: Hydraulic Piloted;
6900 Series: Air Piloted.

Rated Flow

Nominal: 8 U.S. gpm (30 L/min);
Maximum: 15 U.S. gpm (57 L/min).

Rated Pressure

5000 psi (350 bar).

Tank Port Pressure (Maximum)

Manual Actuated Models:
3000 psi (210 bar).

Solenoid Actuated Models:
Standard,
1500 psi (105 bar);
High Pressure Option ("HT"),
AC models, 2300 psi (160 bar);
DC models, 3000 psi (210 bar).

Hydraulic and Air Actuated Models:
1500 psi (105 bar).

Flow Capacity – Solenoid Models

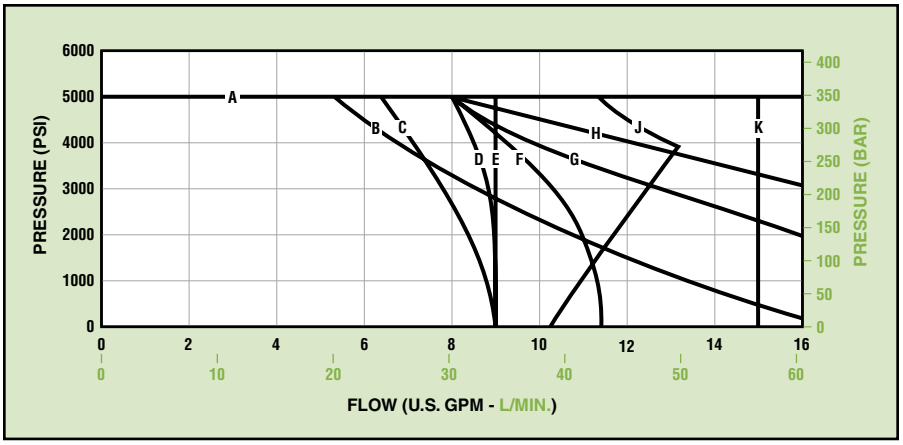

Flow Curve Reference

Solenoid Type	Spool Type										
	0	1	3	4	011	2	2R	32	32R	36	03
AC	A	A	H	A	C	E	E	J	J	B	B
DC and "EP"	A	A	A	A	D	K	K	F	F	G	A

Response Time (Full Stroke)

Solenoid Energized:
AC, 12 ms; DC, 20 ms.
Spring Returned:
AC, 15 ms; DC, 20 ms.

Solenoid Options

Models are available with standard AC or DC solenoids. Optional Plug-In-Terminal Solenoids fit DIN Connector, Standard 43650 Form A ("Hirschmann" type).

For electrical specifications, see page 6.

Electrical Connections

Standard Wiring Box with UL listed and CSA approved wire leads;

Optional Terminal Strip, Cable Grip or Pin Connector (N.F.P.A. standard T3.5-29-1980; A.N.S.I. standard B93.55M-1981). For detailed information on these options, see pages 7-8.

Explosion Proof Option ("EP")

Solenoids with special enclosures are approved by UL and CSA for use in hazardous locations. Available with AC or DC solenoids.

UL Classification:
Class I, Group C, D;
Class II, Group E, F, G.

CSA/UL Recognized ("C" Option)

Solenoid coils are printed with the symbol:

(CSA and UL Recognized)

This option is available with "115DF" standard AC solenoids only. For availability with other voltages, contact the Dynex sales department.

VALVE FLOW CAPACITY

Flow capacity depends on valve actuator, internal operator and spool type.

Solenoid Models

The flow capacity curves, above, show typical performance for each spool type. The letters in the "Flow Curve Reference" table identify the appropriate curve.

Lever Operated Models

Most manual models are rated for 15 U.S. gpm (57 L/min) maximum. The exception is model 613011-D03 which is rated for 13 U.S. gpm (49 L/min) maximum. This model has a Code 3 internal operator (two position, detented operation) with Type 011 spool (tandem center).

Pilot Operated Models

The nominal flow capacity for most pilot operated valves is 15 U.S. gpm (57 L/min). When using a Type 011 spool (tandem center, open crossover), the maximum flow is 10 U.S. gpm (38 L/min).

Maximum flow for pilot operated valves is dependent on pilot pressure. The table shows the minimum pressure required to shift the spool, for various flow capacities.

Maximum Pilot Pressure:

Hydraulic, 3000 psi (210 bar);
Air, 200 psi (14 bar).

Required Volume (to shift spool full stroke):
Hydraulic, 0.014 in^3 (0,23 cm^3);
Air, 0.220 in^3 (3,61 cm^3).

Minimum Pilot Pressure

Series (Actuator Type)	Spool Type	Pilot Pressure at: 5 U.S. gpm (19 L/min) psi	bar	8 U.S. gpm (30 L/min) psi	bar	15 U.S. gpm (57 L/min) psi	bar
6800 Series (Hydraulic Piloted)①	0	130	9,0	165	11,4	200	13,8
	1	150	10,3	165	11,4	420	29,0
	3	145	10,0	165	11,4	180	12,4
	4	130	9,0	165	11,4	200	13,8
	011, 2 or 2R	190	13,1	275	19,0	–	–
	32 or 32R	150	10,3	200	13,8	–	–
	36	150	10,3	200	13,8	350	24,1
	03	130	9,0	165	11,4	200	13,8
6900 Series (Air Piloted)	0	25	1,7	28	1,9	33	2,3
	1	21	1,4	22	1,5	24	1,7
	3 or 4	25	1,7	28	1,9	34	2,3
	011	23	1,6	40	2,8	–	–
	2 or 2R	23	1,6	40	2,8	–	–
	32 or 32R	25	1,7	30	2,1	–	–
	36	25	1,7	28	1,9	34	2,3
	03	25	1,7	28	1,9	33	2,3

① *The values listed are based on zero tank pressure. As back-pressure increases above zero, the minimum pilot pressure must be increased by the same amount.*

VALVE EFFICIENCY

D03 valves provide exceptionally low pressure drop, as shown in the performance curves.

Determining Pressure Drop

The curves show typical resistance to flow for various spool types. The table identifies the proper pressure drop curve for each spool and flow path.

An Example

In the table under spool Type 1, curve "C" is called out to determine the pressure drop for P→A. Looking at the curves, "C" indicates a drop of about 55 psi at 8 U.S. gpm (3,8 bar at 30 L/min).

To determine total "loop" drop, the individual pressure drops for P→A and B→T (or P→B and A→T) must be added.

Pressure Drop (ΔP)

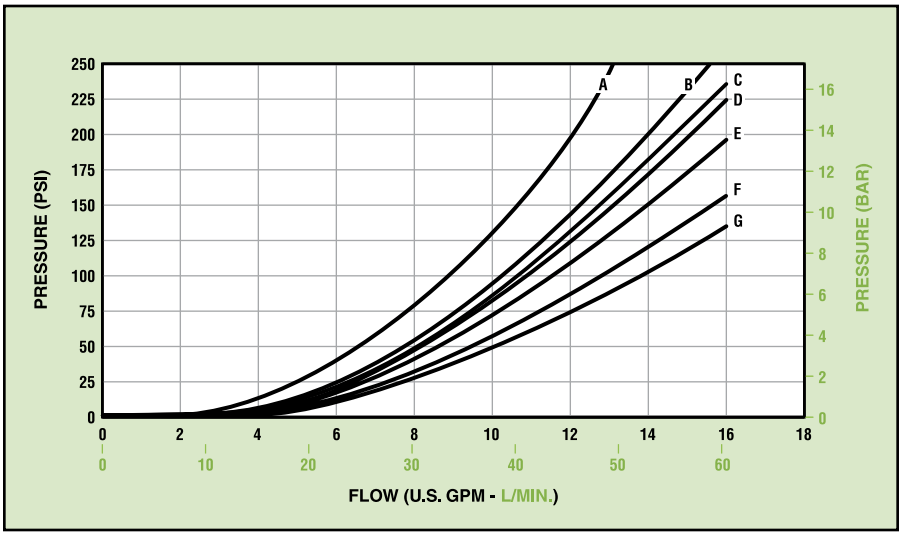

Flow Curve Reference

Flow Path	Spool Type 0	1	3	4	011	2	2R	32	32R	36	03
P→A	B	C	B	C	C	C	C	B	B	B	B
P→B	B	C	B	C	C	C	C	B	B	B	B
A→T	E	F	F	E	C	C	C	E	F	G	–
B→T	E	F	F	E	C	C	C	F	E	G	–
P→T	–	D	–	–	A	A	A	–	–	–	–

INSTALLATION AND DIMENSIONS

Valve Mounting

The mounting surface drawing shows the minimum flush or raised surface required for the N.F.P.A. D03 (CETOP 3) pattern.

Port o-rings are included with all valves.

Mounting bolts must be ordered separately: 10-24 U.N.C. Threaded x 0.75 inch (19 mm), Grade 8 or better, four required. Recommended mounting torque is 65 lb•in (7,3 N•m).

See "Subplate and Bolt Kits" on page 12.

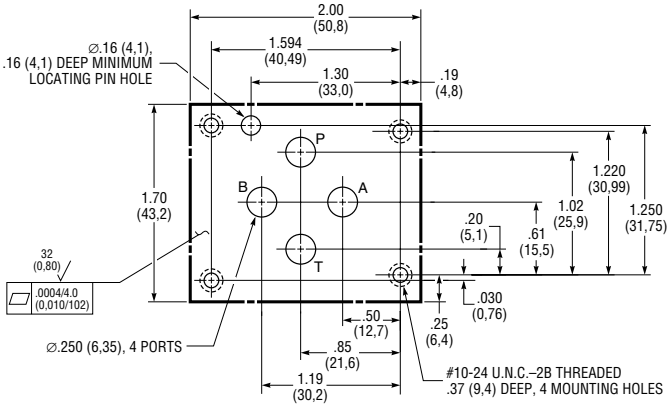

Minimum Mounting Surface, N.F.P.A. D03 (CETOP 3) Pattern

Solenoid Model Dimensions

Dimensions are shown for both AC and DC solenoids. DC configuration is shown printed in gray.

The overall length of a single solenoid model (not shown) is 6.78 inches (172,2 mm) AC and 7.39 inches (187,7 mm) DC.

Weight (Mass):

Single Solenoid,
AC, 3.4 lb (1,5 kg);
DC, 3.9 lb (1,8 kg).

Double Solenoid,
AC, 4.0 lb (1,8 kg);
DC, 5.3 lb (2,4 kg).

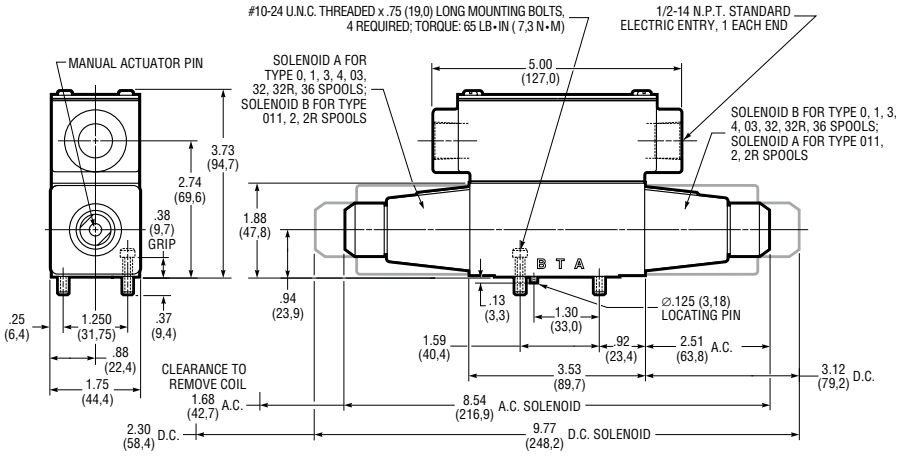

6500 Series, Double Solenoid Models

Explosion Proof Solenoids

"EP" solenoids with special enclosures are approved by UL and CSA for use in hazardous locations. Overall length of single solenoid models (not shown) is 8.23 inches (209,9 mm).

A kit with a spacer plate (part number KV00301065) is required when valves are mounted on manifolds, side outlet subplates or when used as a pilot valve.

Weight (Mass):

Single Solenoid, 8.3 lb (3,8 kg);
Double Solenoid, 14.0 lb (6,4 kg).

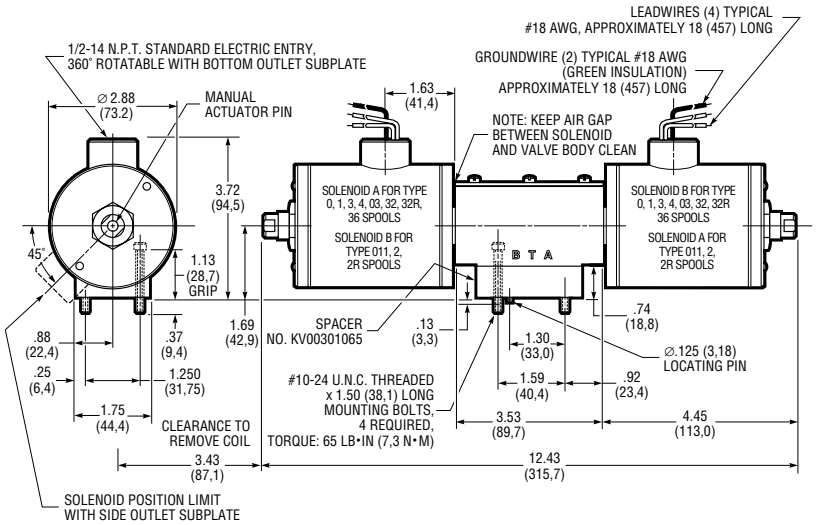

6500 Series, Double "EP" Solenoid Models

Manual Operated Models

Manual models are lever actuated, with handle positioned in a choice of four positions on either port "A" or port "B" end of valve. To specify position, refer to "Typical Model Code" on page13.

Valves can be mounted without removing nameplate; openings in the nameplate provide access to mounting holes in valve body.

Weight (Mass):

3.2 lb (1,5 kg).

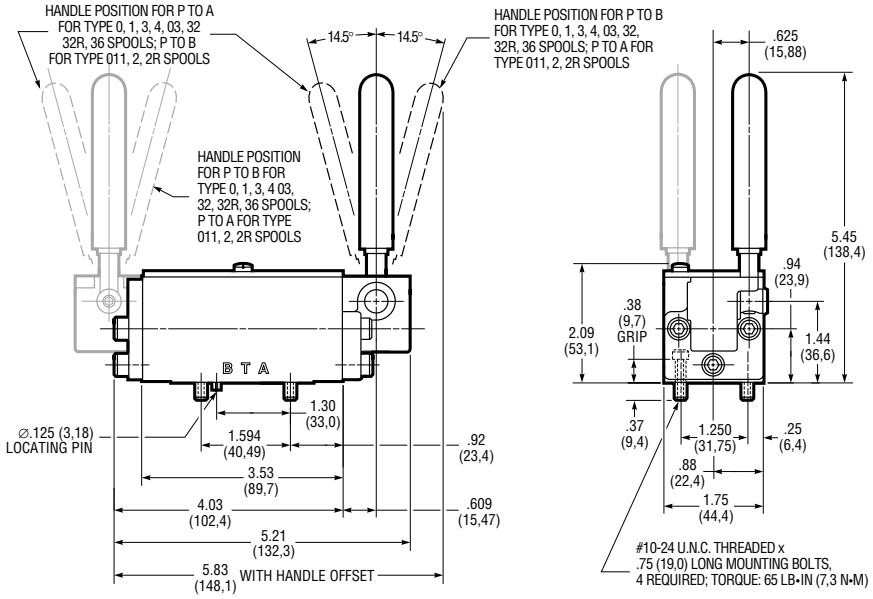

6100 Series, Manual Lever Operated

Hydraulic Pilot Operated

Overall length of single actuator configuration (not shown) is 5.25 inches (133,4 mm).

Valves can be mounted without removing nameplate; openings in the nameplate provide access to mounting holes in valve body.

Weight (Mass):

Single Actuator, 2.5 lb (1,1 kg);
Double Actuator, 2.8 lb (1,3 kg).

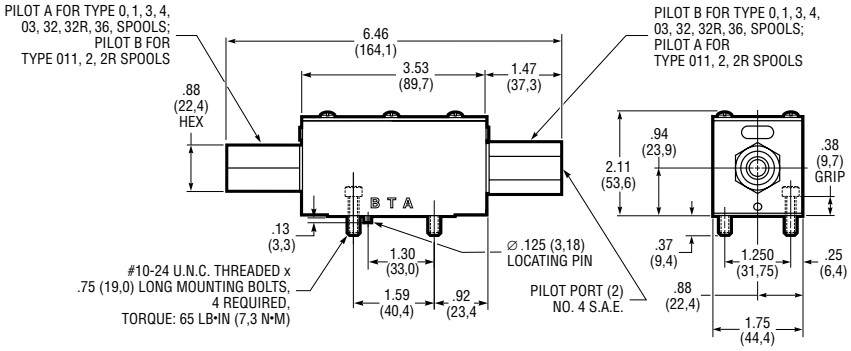

6800 Series, Double Hydraulic Piloted Models

Air Piloted Models

Overall length of single actuator configuration (not shown) is 5.56 inches (141,2 mm).

Valves can be mounted without removing nameplate; openings in nameplate provide access to mounting holes in valve body.

Weight (Mass):

Single Actuator, 2.3 lb (1,0 kg);
Double Actuator, 2.5 lb (1,1 kg.)

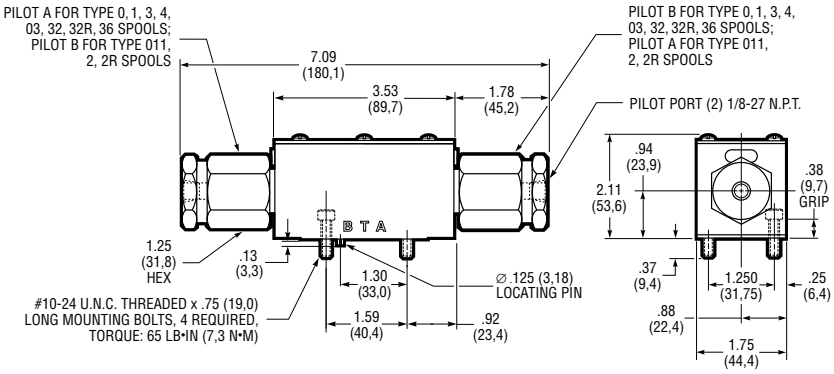

6900 Series, Double Air Piloted Models

D03 SUBPLATE AND BOLT KITS

Part Number	Description
Subplates:	
P25-D03-.38	Universal, 3/8 inch N.P.T.F.
P27-D03-SAE8	Bottom Ports, No. 8 S.A.E.
PSO27-D03-SAE8	Side Ports, No. 8 S.A.E.
Mounting Bolts:	
P25-BK-12	Four 10-24 U.N.C. Threaded x 0.75 inches (19,0 mm)

TYPICAL MODEL CODE

6 5 4 0 – D03 – 115DF – R – T – ✳ – 1 0

Valve Type	
6	Subplate Mounted Directional Control

Actuator	
1	Manual Lever
5	Solenoid Operated
8	Hydraulic Piloted
9	Air Piloted

Internal Operator	
1	Two Position: Spring Offset (P→B), Actuator Offset (P→A)
2	Two Position: Spring Offset (P→A), Actuator Offset (P→B)
3	Two Position: Actuator Offset, Detented;① Three Position: Detented (Manual Lever Only)
4	Two Position: Spring Centered, Actuator Offset②③
5	Three Position: Spring Centered, Actuator Offset
6	Two Position: Spring Offset, Actuator Centered②④
7	Two Position: Detented (Manual Lever Only)

① *Only available with Type 0, 1 and 03 spools.*
② *Not available with Manual Lever valves.*
③ *For most spools, normal flow is actuator offset P→A. For Spool Type 011 (tandem center) normal flow is actuator offset P→B.*
④ *For most spools, normal flow is spring offset P→B. For Spool Type 011 (tandem center) normal flow is spring offset P→A.*

Spools			
0	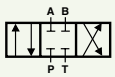	2①	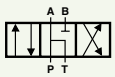
1	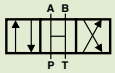	2R①	
3①	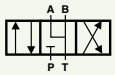	32①	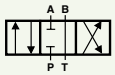
4①	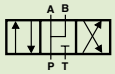	32R①	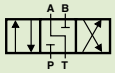
011①②	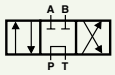	36①	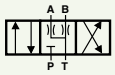
		03	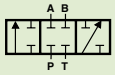

① *Not available with Type 3 Internal Operators (except Manual Lever models).*
② *Open Crossover.*

Valve Size	
D03	N.F.P.A. D03 (CETOP 3) Mounting Pattern

Reverse Flow Option	
R	Reverse Flow (Code 4 and Code 6 Internal Operators Only)

Lever Position (Manual Models Only)	
A12	12 o'clock positon, port "A" end
A3	3 o'clock positon, port "A" end
A6	6 o'clock positon, port "A" end
A9	9 o'clock positon, port "A" end
B12	12 o'clock positon, port "B" end
B3	3 o'clock positon, port "B" end
B6	6 o'clock positon, port "B" end
B9	9 o'clock positon, port "B" end

Design Number

Modification Number

Solenoid Options	
BH3A	3-pin Connector for single solenoid models on port "A" end ①②③
BH3B	3-pin Connector for single solenoid models on port "B" end ①②③
BH5A	5-pin Connector for single or double solenoid models on port "A" end①②③
BH5B	5-pin Connector for single or double solenoid models on port "B" end①②③
C	CSA and UL Recognized Coils (Etched with Symbol)④
CG	Cable Grip for .38 to .44 inch (9,5 to 11,1 mm) O.D. machine tool cable①②
HT	High Pressure Tank Port: 2300 psi (160 bar) maximum AC models; 3000 psi (210 bar) maximum DC models
M	Hand Actuated Manual Override①
SL	Solenoid Lights (available 115DF AC only)①②
T	Terminal Strip①②

① *Option not available with "EP" solenoid models.*
② *Option not available with "Plug-In Terminal" solenoid models.*
③ *N.F.P.A. standard T3.539-1980; A.N.S.I. standard B93.55M-1981.*
④ *Available with 115DF solenoids only.*

Electrical Options			
Standard AC Solenoids (Dual Frequency):		*Standard DC Solenoids:*	
24DF	24V/60Hz, 24V/50Hz	12DC	12VDC
115DF	115V/60HZ, 110V/50Hz	24DC	24VDC
230DF	230V/60Hz, 220V/50Hz		
460DF	460V/60Hz, 440V/50Hz		
Plug-In Terminal AC Solenoids:①		*Plug-In Terminal DC Solenoids:①*	
115HA	115V/60Hz, 110V/50Hz	12HD	12VDC
230HA	230V/60Hz, 220V/50Hz	24HD	24VDC
Explosion-Proof AC Solenoids:		*Explosion-Proof DC Solenoids:*	
115EP	115V/60Hz	12EP	12VDC
110EP	110V/50Hz	24EP	24VDC
220EP	220V/50Hz		

① *Fits DIN Connector Standard 43650 Form A ("Hirschmann" type).*

HIGH PRESSURE HP03 PATTERN

VALVE DESCRIPTION

HP03 valves operate at pressures to 10 000 psi (700 bar), double that of most other conventional subplate mounted valves.

These compact sliding-spool valves provide true four-way control in a simple compact package. A range of actuators, spools, internal operators and electrical options provides design flexibility.

For a description of spools, operators and application information, refer to pages 4-6.

Mounting

Special HP03 pattern. Refer to page 17.

Actuator Options

6100 Series: Manual Lever;
6500 Series: Direct Solenoid;
6800 Series: Hydraulic Piloted;
6900 Series: Air Piloted.

Rated Flow

5 U.S. gpm (19 L/min) nominal. Flows to 15 U.S. gpm (57 L/min) are possible with some models. See "Valve Flow Capacity".

Rated Pressure

10 000 psi (700 bar).

Tank Port Pressure (Maximum)

Manual Actuated Models:
3000 psi (210 bar).

Solenoid Actuated Models:
Standard,
1500 psi (105 bar);
High Pressure Option ("HT"),
AC models, 2300 psi (160 bar);
DC models, 3000 psi (210 bar).

Hydraulic and Air Actuated Models:
1500 psi (105 bar).

Flow Capacity – Solenoid Models

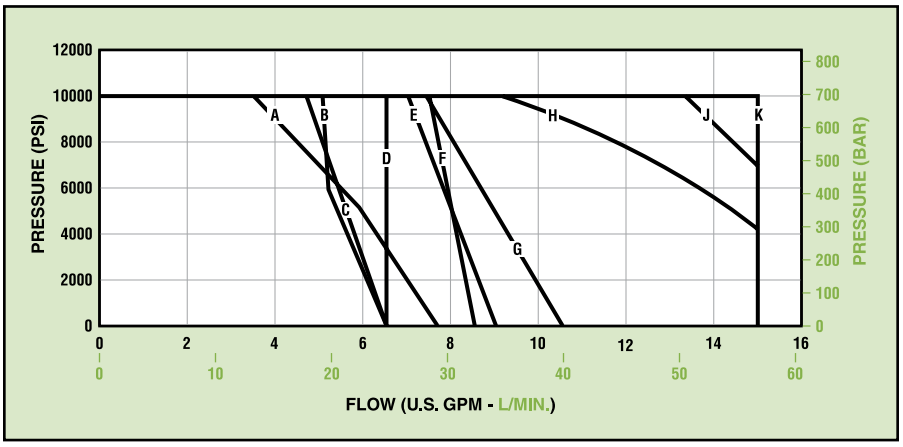

Flow Curve Reference

Operator Code	Solenoid Type	Spool Type												
		0	20	1	21	3	4	011	2	2R	32	32R	36	03
1	All Types	–	J	–	K	–	–	–	–	–	–	–	–	–
2	All Types	–	J	–	K	–	–	–	–	–	–	–	–	–
3	All Types	B	–	K	–	–	–	–	–	–	–	–	–	–
4 and 5	AC	E	–	K	–	K	K	A	A	A	C	C	D	G
	DC and "EP"	K	–	K	–	K	K	A	A	A	K	K	K	K
6	All Types	K	–	K	–	K	K	F	F	F	K	K	K	H

Response Time (Full Stroke)

Solenoid Energized:
AC, 12 ms; DC, 20 ms.
Spring Returned:
AC, 15 ms; DC, 20 ms.

Solenoid Options

Models are available with standard AC or DC solenoids. Optional Plug-In-Terminal Solenoids fit DIN Connector, Standard 43650 Form A ("Hirschmann" type).

For electrical specifications, see page 6.

Electrical Connections

Standard Wiring Box with UL listed and CSA approved wire leads;

Optional Terminal Strip, Cable Grip or Pin Connector (N.F.P.A. standard T3.5-29-1980; A.N.S.I. standard B93.55M-1981). For detailed information on these options, see pages 7-8.

Explosion Proof Option ("EP")

Solenoids with special enclosures are approved by UL and CSA for use in hazardous locations. Available with AC or DC solenoids.

UL Classification:
Class I, Group C, D;
Class II, Group E, F, G.

CSA/UL Recognized ("C" Option)

Solenoid coils are printed with the symbol:

(CSA and UL Recognized)

This option is available with "115DF" standard AC solenoids only. For availability with other voltages, contact the Dynex sales department.

VALVE FLOW CAPACITY

Flow capacity depends on valve actuator, internal operator and spool type.

Solenoid Models

The flow capacity curves, above, show typical performance for each internal operator and spool type. The letters in the "Flow Curve Reference" table identify the appropriate curve.

Lever Actuated Models

Most manual models are rated for 15 U.S. gpm (57 L/min) maximum.

The exception is model 613011-D03 which is rated for 13 U.S. gpm (49 L/min) maximum. This model has a Code 3 internal operator (two position, detented operation) with Type 011 spool (tandem center).

Pilot Operated Models

The nominal flow capacity for most pilot operated valves is 8 U.S. gpm (30 L/min). When using a Type 011 spool (tandem center, open crossover), the maximum flow is 6 U.S. gpm (23 L/min).

Maximum flow for pilot operated valves is dependent on pilot pressure. The table shows the minimum pressure required to shift the spool at 5 U.S. gpm (19 L/min).

Maximum Pilot Pressure:

Hydraulic, 3000 psi (210 bar);
Air, 200 psi (14 bar).

Required Volume (to shift spool full stroke):
Hydraulic, 0.014 in^3 (0,23 cm^3);
Air, 0.220 in^3 (3,61 cm^3).

Lever Actuated Flow Limitations

Operator Code	Spool Type	Maximum Flow U.S. gpm	Maximum Flow L/min
1 and 2	0	7.0	26
	1	8.0①	30①
	03	7.0	26
3	1	8.0①	30①
	011	7.5	28
	2 or 2R	7.5	28
5	1	8.0①	30①
7	1	8.0①	30①

① *8 U.S. gpm (30 L/min) maximum at 10 000 psi (700 bar). Flow capacity increases at reduced pressure; i.e. 11 U.S. gpm (41 L/min) at 2000 psi (140 bar).*

Minimum Pilot Pressure

Series (Actuator Type)	Spool Type	Pilot Pressure at 5 U.S. gpm (19 L/min) psi	Pilot Pressure at 5 U.S. gpm (19 L/min) bar
6800 Series (Hydraulic Piloted)①	0 or 20	215	14,8
	1 or 21	150	10,3
	3	145	10,0
	4	130	9,0
	011, 2 or 2R	190	13,1
	32 or 32R	150	10,3
	36	150	10,3
	03	130	9,0
6900 Series (Air Piloted)	0 or 20	25	1,7
	1 or 21	21	1,4
	3 or 4	25	1,7
	011	23	1,6
	2 or 2R	23	1,6
	32 or 32R	25	1,7
	36	25	1,7
	03	35	2,4

① *The values listed are based on zero tank pressure. As back-pressure increases above zero, the minimum pilot pressure must be increased by the same amount.*

VALVE EFFICIENCY

Pressure drop for all models, except manual lever actuated , are shown at right.

Flow may be limited for certain spools. See "Flow Capacity" curves on page 14.

Determining Pressure Drop

The curves show typical resistance to flow for various spool types. The table identifies the proper pressure drop curve for each spool and flow path.

An Example

In the table under spool Type 1, curve "D" is called out to determine the pressure drop for P→A. Looking at the curves, "D" indicates a drop of about 65 psi at 5 U.S. gpm (4,5 bar at 19 L/min).

To determine total "loop" drop, the individual pressure drops for P→A and B→T (or P→B and A→T) must be added.

Pressure Drop (ΔP)

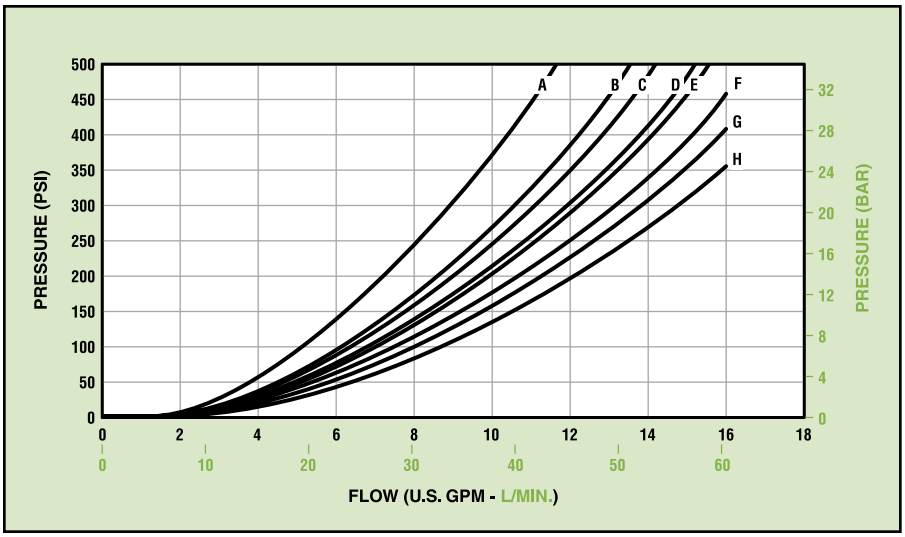

Flow Curve Reference

Flow Path	Spool Type 0	20	1	21	3	4	011	2	2R	32	32R	36	03
P→A	B	B	D	E	B	D	C	C	B	B	B	B	B
P→B	B	B	D	E	B	D	C	C	B	B	B	B	B
A→T	E	E	G	G	H	E	E	E	E	E	E	E	–
B→T	E	E	G	G	H	E	E	E	E	E	E	E	–
P→T	–	–	D	D	–	–	A	A	–	–	–	–	–

Manual Lever Models

The curves show typical resistance to flow for various spool types. The table identifies the proper pressure drop curve for each spool and flow path.

An Example

In the table under spool Type 1, curve "C" is called out to determine the pressure drop for P→A. Looking at the curves, "C" indicates a drop of about 60 psi at 5 U.S. gpm (4,1 bar at 19 L/min).

To determine total "loop" drop, the individual pressure drops for P→A and B→T (or P→B and A→T) must be added.

Pressure Drop (ΔP) – Manual Lever Models

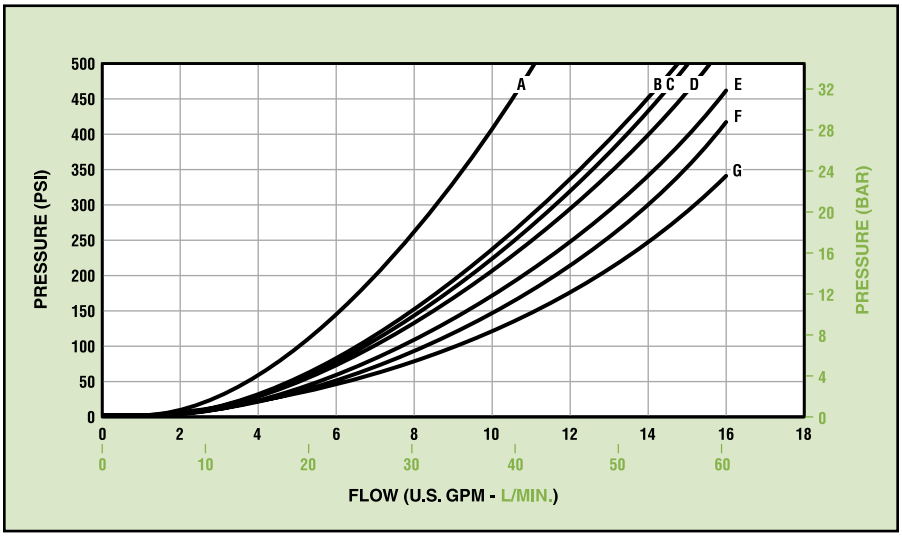

Flow Curve Reference

Flow Path	Spool Type										
	0	1	3	4	011	2	2R	32	32R	36	03
P→A	B	C	B	C	B	B	B	B	B	B	B
P→A	B	C	B	C	B	B	B	B	B	B	B
P→A	F	G	G	F	D	D	D	F	F	F	–
P→A	E	G	G	F	D	D	D	F	F	F	–
P→T	–	B	–	–	A	A	A	–	–	–	–

INSTALLATION AND DIMENSIONS

Special Valve Mounting

Although similar to standard N.F.P.A. D03 (CETOP #3) valves in size, HP03 valves require a special high pressure mounting pattern. The mounting surface drawing shows the minimum flush or raised surface required for the HP03 pattern.

Port o-rings are included with valves.

Mounting bolts must be ordered separately: .250-20 U.N.C. Threaded x 0.75 inch (19 mm), Grade 8 or better, four required. Recommended mounting torque is 12 lb•ft (16 N•m).

See "Subplate and Bolt Kits" on page 18.

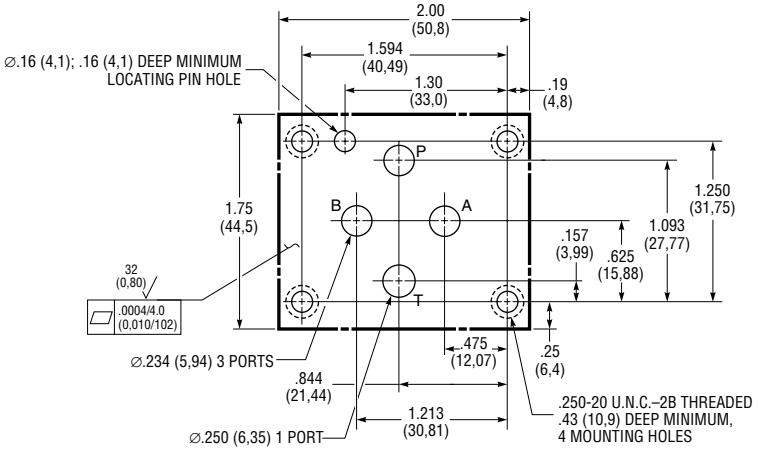

Minimum Mounting Surface, Special HP03 Pattern

Solenoid Model Dimensions

Dimensions are shown for both AC and DC solenoids. DC configuration is shown printed in gray.

The overall length of a single solenoid model (not shown) is 6.78 inches (172,2 mm) AC and 7.39 inches (187,7 mm) DC.

Weight (Mass):

Single Solenoid,
AC, 3.4 lb (1,5 kg);
DC, 3.9 lb (1,8 kg).

Double Solenoid,
AC, 4.0 lb (1,8 kg);
DC, 5.3 lb (2,4 kg).

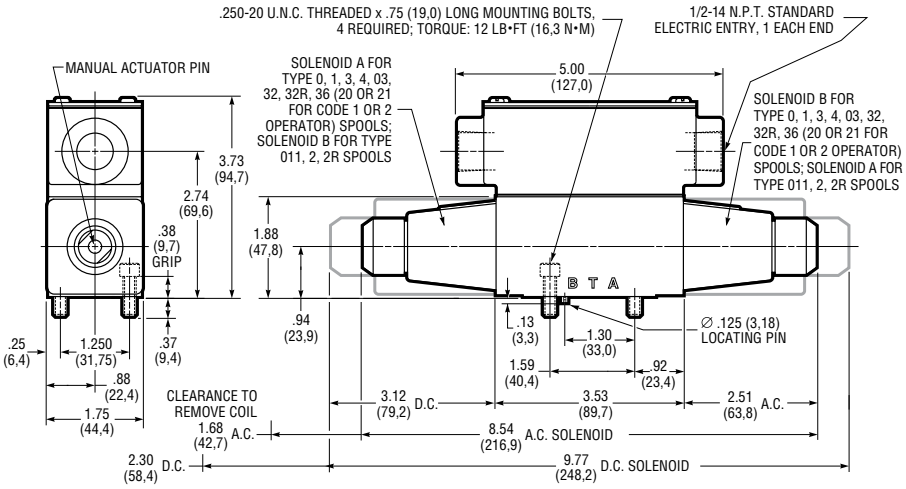

6500 Series, Double Solenoid Models

Explosion Proof Solenoids

"EP" solenoids with special enclosures are approved by UL and CSA for use in hazardous locations.

Overall length of single solenoid models (not shown) is 8.23 inches (209,9 mm).

A kit with a spacer plate (part number KV00301066) is required when valves are mounted on manifolds, side outlet subplates or when used as a pilot valve.

Weight (Mass):

Single Solenoid, 8.3 lb (3,8 kg);
Double Solenoid, 14.0 lb (6,4 kg).

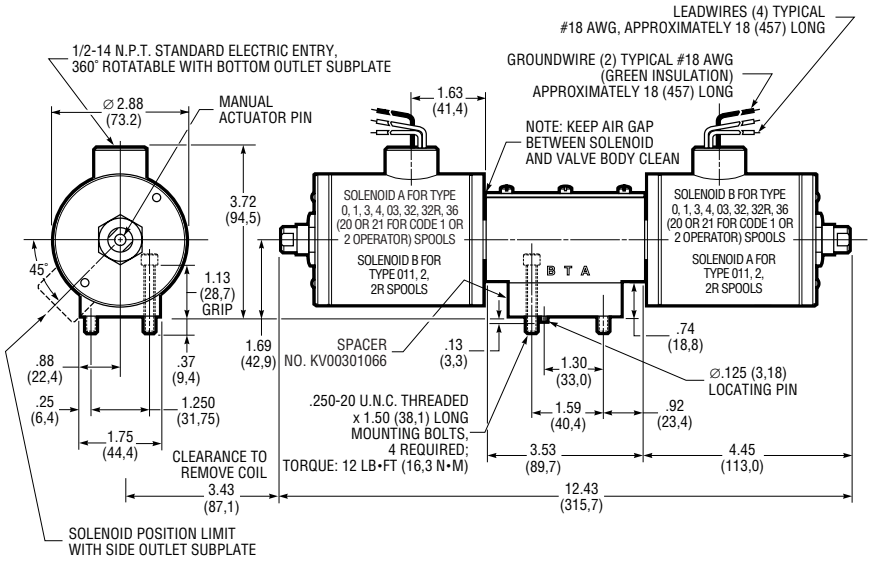

6500 Series, Double "EP" Solenoid Models

Manual Operated Models

Manual models are lever actuated, with handle positioned in a choice of four positions on either port "A" or port "B" end of valve. To specify position, refer to "Typical Model Code" on page 19.

Valves can be mounted without removing nameplate; openings in the nameplate provide access to mounting holes in valve body.

Weight (Mass):

3.2 lb (1,5 kg).

Hydraulic Pilot Operated

Overall length of single actuator configuration (not shown) is 5.25 inches (133,4 mm).

Valves can be mounted without removing nameplate; openings in the nameplate provide access to mounting holes in valve body.

Weight (Mass):

Single Actuator, 2.5 lb (1,1 kg);
Double Actuator, 2.8 lb (1,3 kg).

Air Piloted Models

Overall length of single actuator configuration (not shown) is 5.56 inches (141,2 mm).

Valves can be mounted without removing nameplate; openings in nameplate provide access to mounting holes in valve body.

Weight (Mass):

Single Actuator, 2.3 lb (1,0 kg);
Double Actuator, 2.5 lb (1,1 kg.)

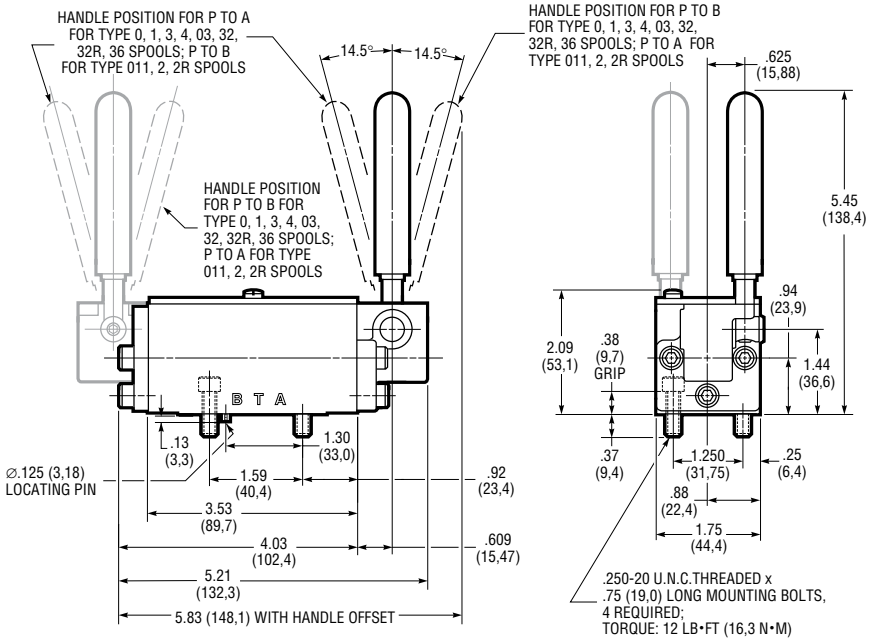

6100 Series, Manual Lever Operated Models

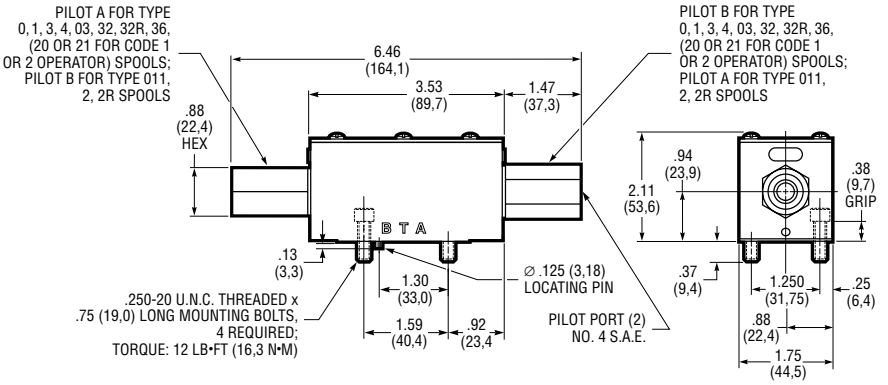

6800 Series, Double Hydraulic Piloted Models

HP03 SUBPLATE AND BOLT KITS

Part Number	Description
Subplates:	
PSO29-HP03-SAE6	Side Ports, No. 6 S.A.E.
PSO29-HP03-BSP6	Side Ports, G 3/8 (B.S.P.)
PSO30-HP03-.56MP①	Side Ports, 9/16 Medium Pressure Coned and Threaded .8125-16 U.N. Threaded
Mounting Bolts:	
P11-BK	Four .250-20 U.N.C. Threaded x 0.75 inches (19,0 mm)

① *Port uses Autoclave Medium Pressure, Butech M/P or equivalent fitting.*

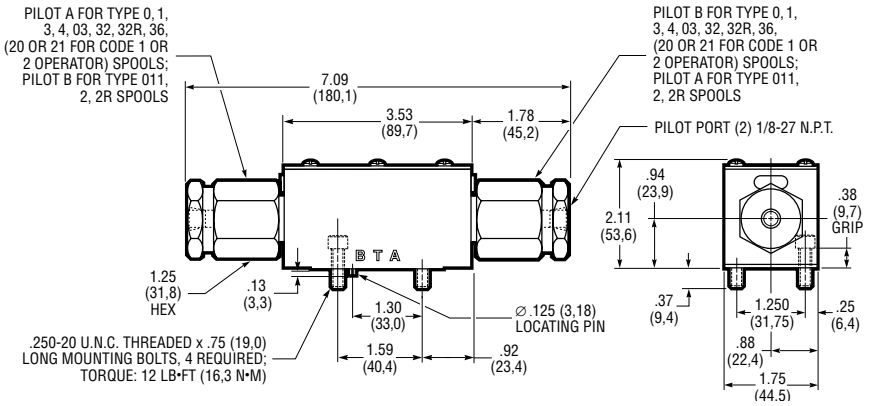

6900 Series, Double Air Piloted Models

TYPICAL MODEL CODE

6 5 4 0 – HP03 – 115DF – R – T – ✳ – 2 0

Valve Type	
6	Subplate Mounted Directional Control

Actuator	
1	Manual Lever
5	Solenoid Operated
8	Hydraulic Piloted
9	Air Piloted

Internal Operator	
1	Two Position: Spring Offset (P→B), Actuator Offset (P→A)①
2	Two Position: Spring Offset (P→A), Actuator Offset (P→B)①
3	Two Position: Actuator Offset, Detented;② Three Position: Detented (Manual Lever Only)
4	Two Position: Spring Centered, Actuator Offset③④
5	Three Position: Spring Centered, Actuator Offset
6	Two Position: Spring Offset, Actuator Centered③⑤
7	Two Position: Detented (Manual Lever Only)

① *Only available with Type 20 and 21 spools.*
② *Only available with Type 0, 1 and 03 spools.*
③ *Not available with Manual Lever valves.*
④ *For most spools, normal flow is actuator offset P→A. For Spool Type 011 (tandem center) normal flow is actuator offset P→B.*
⑤ *For most spools, normal flow is spring offset P→B. For Spool Type 011 (tandem center) normal flow is spring offset P→A.*

Spools			
0,20①	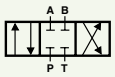	2②	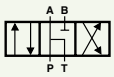
1,21①	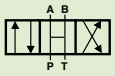	2R②	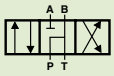
3②	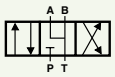	32②	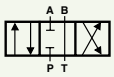
4②	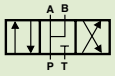	32R②	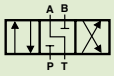
011②③	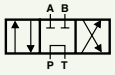	36②	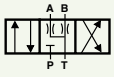
		03	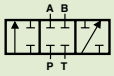

① *Code 1 or 2 Operators only use Type 20 or Type 21 spools. These spools provide the same function, but are not interchangeable with Type 0 or Type 1 spools.*
② *Not available with Type 3 Internal Operators (except Manual Lever models).*
③ *Open Crossover.*

Valve Size	
HP03	High Pressure Special Mounting Pattern

Reverse Flow Option	
R	Reverse Flow (Code 4 and Code 6 Internal Operators Only)

Design Number

Modification Number

Lever Position (Manual Models Only)	
A12	12 o'clock positon, port "A" end
A3	3 o'clock positon, port "A" end
A6	6 o'clock positon, port "A" end
A9	9 o'clock positon, port "A" end
B12	12 o'clock positon, port "B" end
B3	3 o'clock positon, port "B" end
B6	6 o'clock positon, port "B" end
B9	9 o'clock positon, port "B" end

Solenoid Options	
BH3A	3-pin Connector for single solenoid models on port "A" end ①②③
BH3B	3-pin Connector for single solenoid models on port "B" end ①②③
BH5A	5-pin Connector for single or double solenoid models on port "A" end①②③
BH5B	5-pin Connector for single or double solenoid models on port "B" end①②③
C	CSA and UL Recognized Coils (Etched with Symbol)④
CG	Cable Grip for .38 to .44 inch (9,5 to 11,1 mm) O.D. machine tool cable①②
HT	High Pressure Tank Port: 2300 psi (160 bar) maximum AC models; 3000 psi (210 bar) maximum DC models
M	Hand Actuated Manual Override①
SL	Solenoid Lights (available 115DF AC only)①②
T	Terminal Strip①②

① *Option not available with "EP" solenoid models.*
② *Option not available with "Plug-In Terminal" solenoid models.*
③ *N.F.P.A. standard T3.539-1980; A.N.S.I. standard B93.55M-1981.*
④ *Available with 115DF solenoids only.*

Electrical Options			
Standard AC Solenoids (Dual Frequency):		*Standard DC Solenoids:*	
24DF	24V/60Hz, 24V/50Hz	12DC	12VDC
115DF	115V/60HZ, 110V/50Hz	24DC	24VDC
230DF	230V/60Hz, 220V/50Hz		
460DF	460V/60Hz, 440V/50Hz		
Plug-In Terminal AC Solenoids:①		*Plug-In Terminal DC Solenoids:①*	
115HA	115V/60Hz, 110V/50Hz	12HD	12VDC
230HA	230V/60Hz, 220V/50Hz	24HD	24VDC
Explosion-Proof AC Solenoids:		*Explosion-Proof DC Solenoids:*	
115EP	115V/60Hz	12EP	12VDC
110EP	110V/50Hz	24EP	24VDC
220EP	220V/50Hz		

① *Fits DIN Connector Standard 43650 Form A ("Hirschmann" type).*

D05 PATTERN

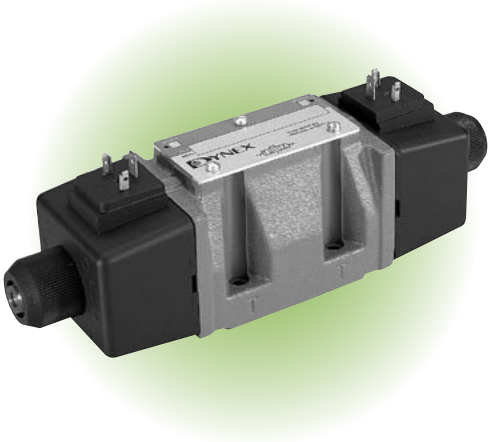

VALVE DESCRIPTION

D05 valves operate efficiently, with large internal flow passages and uniform flow areas throughout the body coring.

Low pressure drop is enhanced with the use of the Dynex standard subplate, which takes advantage of the valve's special double tank port design.

For a description of spools, operators and application information, refer to pages 4-6.

Mounting

Subplate, N.F.P.A. D05 (CETOP 5) pattern.

Actuator Options

6100 Series: Manual Lever;
6500 Series: Direct Solenoid;
6800 Series: Hydraulic Piloted;
6900 Series: Air Piloted.

Rated Flow

20 U.S. gpm (76 L/min) nominal. For maximum flows see "Valve Flow Capacity".

Rated Pressure

5000 psi (350 bar).

Tank Port Pressure (Maximum)

Manual Actuated Models:
3000 psi (210 bar).

Solenoid Actuated Models:
Standard,
1500 psi (70 bar);
High Pressure Option ("HT"),
AC models, 2000 psi (140 bar);
DC models, 2500 psi (170 bar).

Hydraulic and air actuated models:
3000 psi (210 bar).

Response Time (Full Stroke)

Solenoid Energized:
AC, 10-20 ms; DC, 25-35 ms.
Spring Returned:
AC, 15-20 ms; DC, 30-40 ms.

Flow Capacity – Solenoid Models

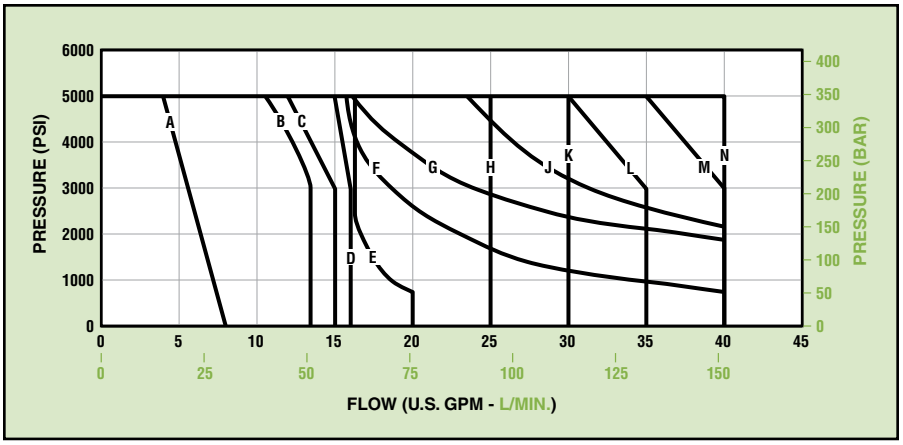

Flow Curve Reference

Operator Code	Solenoid Type	Spool Type									
		0	1	3	4	01	2	2R	32	32R	36
1 and 2	AC	N	C	–	–	–	B	B	K	K	F
	DC and "EP"	N	D	–	–	–	B	B	J	J	G
3	AC	N	E	–	–	–	B	B	K	K	F
	DC and "EP"	N	E	–	–	–	B	B	J	J	G
4 and 5	AC	N	K	N	N	A	B	B	K	K	F
	DC and "EP"	N	N	N	N	A	B	B	J	J	G
6	AC	N	K	K	M	A	B	B	K	K	F
	DC and "EP"	N	H	M	L	A	A	B	J	J	G

Solenoid Options

Models are available with standard AC or DC solenoids. Optional Plug-In-Terminal Solenoids fit DIN Connector, Standard 43650 Form A ("Hirschmann" type).

For electrical specifications, see page 6.

Electrical Connections

Standard Wiring Box with UL listed and CSA approved wire leads;

Optional Terminal Strip, Cable Grip or Pin Connector (N.F.P.A. standard T3.5-29-1980; A.N.S.I. standard B93,55M-1981).

Explosion Proof Option ("EP")

Solenoids with special enclosures are approved by UL and CSA for use in hazardous locations. Available with AC or DC solenoids.

UL Classification:
Class I, Group C, D;
Class II, Group E, F, G.

CSA/UL Recognized ("C" Option)

Solenoid coils are printed with the symbol:

(CSA and UL Recognized)

This option is available with "115DF" standard AC solenoids only. For availability with other voltages, contact the Dynex sales department.

VALVE FLOW CAPACITY

Flow capacity depends on valve actuator, internal operator and spool type.

Solenoid Models

The flow capacity curves, above, show typical performance for each internal operator and spool type. The letters in the "Flow Curve Reference" table identify the appropriate curve.

Lever Operated Models

Manual models are rated for 20 U.S. gpm (76 L/min) nominal flow at 5000 psi (350 bar). Higher flows may be possible with some models. Contact the Dynex sales department to discuss your application.

Pilot Operated Models

The nominal flow capacity for most pilot operated valves is 20 U.S. gpm (76 L/min).

Maximum flow for pilot operated valves is dependent on pilot pressure. The table shows the minimum pressure required to shift the spool, for various flow capacities.

Maximum Pilot Pressure:

Hydraulic, 3000 psi (210 bar);
Air, 200 psi (14 bar).

Required Volume (to shift spool full stroke):
Hydraulic, 0.018 in^3 (0,30 cm^3);
Air, 0.640 in^3 (10,49 cm^3).

Minimum Pilot Pressure

Series (Actuator Type)	Spool Type	Pilot Pressure at: 5 U.S. gpm (19 L/min) psi	bar	10 U.S. gpm (38 L/min) psi	bar	20 U.S. gpm (76 L/min) psi	bar
6800 Series (Hydraulic Piloted)①	0	300	20,7	310	21,4	325	22,4
	1	300	20,7	360	24,8	600	41,4
	3	300	20,7	360	24,8	600	41,4
	4	300	20,7	360	24,8	450	31,0
	01	300	20,7	360	24,8	–	–
	2 or 2R	300	20,7	360	24,8	600	41,4
	32 or 32R	300	20,7	360	24,8	600	41,4
	36	300	20,7	360	24,8	600	41,4
6900 Series (Air Piloted)	0	25	1,7	25	1,7	25	1,7
	1	25	1,7	30	2,1	35	2,4
	3	25	1,7	30	2,1	35	2,4
	4	20	1,4	25	1,7	25	1,7
	01	23	1,7	25	1,7	–	–
	2 or 2R	23	1,7	30	2,1	35	2,4
	32 or 32R	25	1,7	30	2,1	35	2,4
	36	25	1,7	30	2,1	35	2,4

① *The values listed are based on zero tank pressure. As back-pressure increases above zero, the minimum pilot pressure must be increased by the same amount.*

VALVE EFFICIENCY

D05 valves provide exceptionally low pressure drop, as shown in the performance curves. The values indicate typical performance using the Dynex standard subplate, which takes advantage of the valve's special double tank port design.

Flow may be limited for certain spools. See "Flow Capacity" curves on page 20.

Determining Pressure Drop

The curves show typical resistance to flow for various spool types. The table identifies the proper pressure drop curve for each spool and flow path.

An Example

In the table under spool Type 1, curve "D" is called out to determine the pressure drop for P→A. Looking at the curves, "D" indicates a drop of about 28 psi at 12 U.S. gpm (1,9 bar at 45 L/min).

To determine total "loop" drop, the individual pressure drops for P→A and B→T (or P→B and A→T) must be added.

Pressure Drop (ΔP)

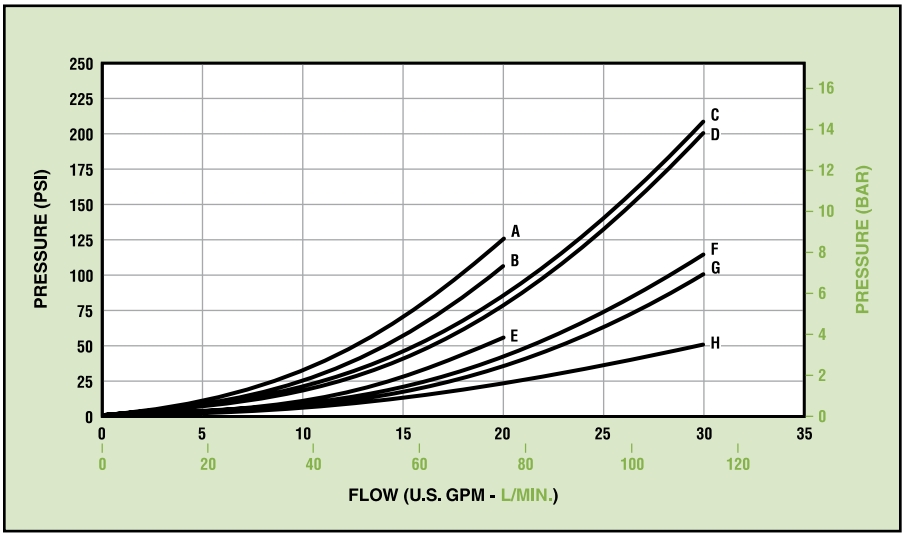

Flow Curve Reference

Flow Path	Spool Type 0	1	3	4	01	2	2R	32	32R	36
P→A	D	D	D	D	B	C	C	D	D	D
P→B	D	D	D	D	B	C	C	D	D	D
A→T	F	H	H	G	E	H	H	F	F	G
B→T	F	H	H	G	E	H	H	F	F	G
P→T	–	D	–	–	A	B	B	–	–	–

INSTALLATION AND DIMENSIONS

Valve Mounting

D05 valves have a second "T" port into a common tank passageway, for lower pressure drop. The mounting surface drawing shows the standard N.F.P.A. pattern, with the optional second "T" port.

Port o-rings are included with valves.

Mounting bolts must be ordered separately: .250-20 U.N.C. Threaded x 1.00 inch (25,4 mm), Grade 8 or better, four required. Recommended mounting torque is 12 lb•ft (16 N•m).

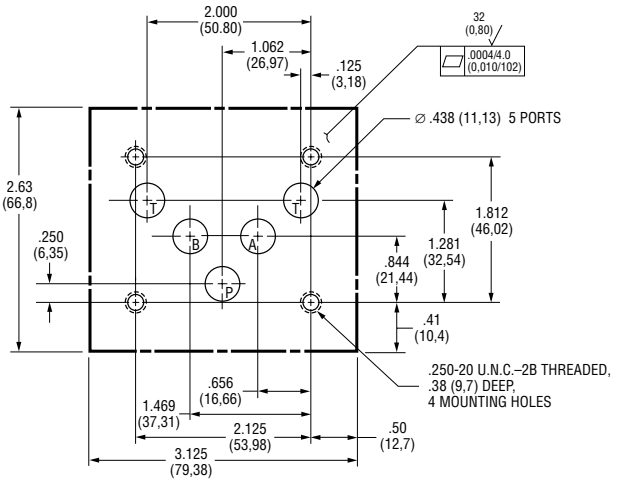

Recommended Minimum Mounting Surface, N.F.P.A. D05 (CETOP 5) Pattern With Two Ports (T) Into Common Tank Passageway

Solenoid Model Dimensions

Dimensions are shown for both AC and DC solenoids. DC configuration is shown printed in gray.

The overall length of a single solenoid model (not shown) is 7.67 inches (194,8 mm) AC and 9.02 inches (229,11 mm) DC.

Weight (Mass):

Single Solenoid,
AC, 8.1 lb (3,7 kg);
DC, 9.5 lb (4,3 kg).

Double Solenoid,
AC, 9.6 lb (4,4 kg);
DC, 12.6 lb (5,7 kg).

See "Subplate and Bolt Kits" on page 23.

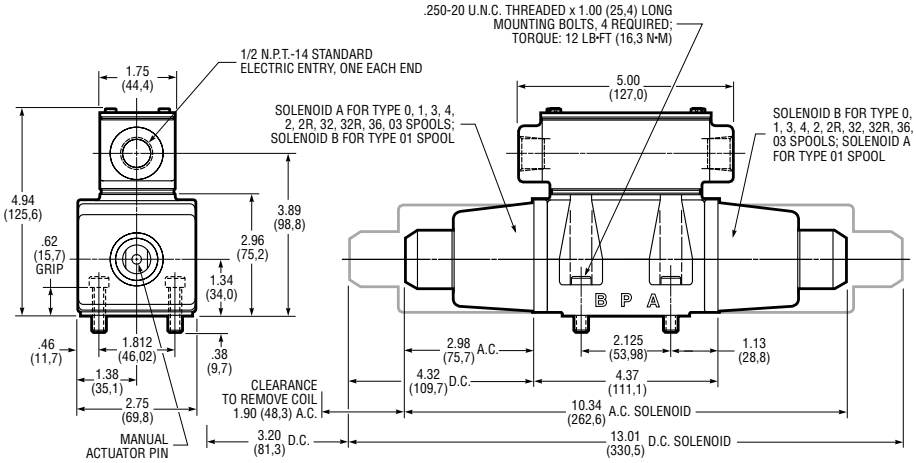

6500 Series, Double Solenoid Models

Explosion Proof Solenoids

"EP" solenoids with special enclosures are approved by UL and CSA for use in hazardous locations.

Overall length of single solenoid models (not shown) is 9.31 inches (236,5 mm).

A kit with a spacer plate (part number KV00501065) is required when valves are mounted on manifolds, side outlet subplates or when used as a pilot valve.

Weight (Mass):

Single Solenoid, 15.7 lb (7,1 kg);
Double Solenoid, 24.8 lb (11,2 kg).

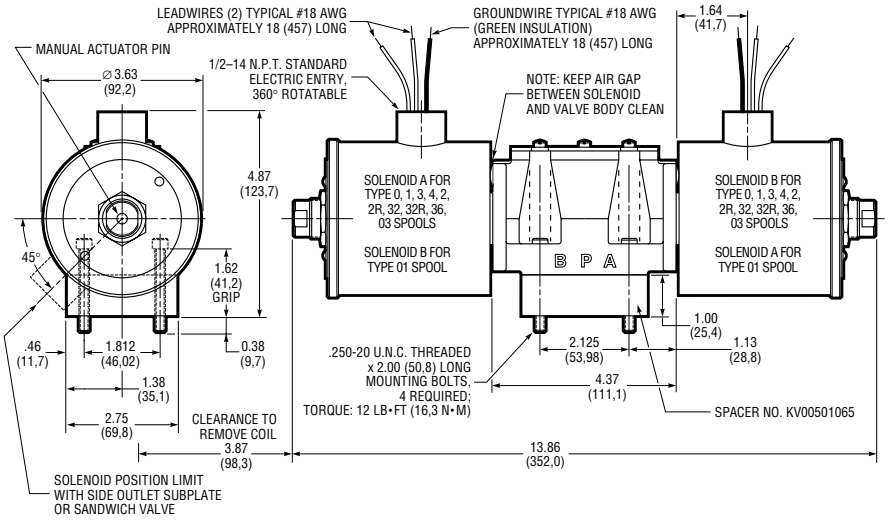

6500 Series, Double "EP" Solenoid Models

Manual Operated Models

Manual models are lever actuated, with handle positioned in a choice of four positions on either port "A" or port "B" end of valve. To specify position, refer to "Typical Model Code" on page 24.

The location of the handle can be changed by removing the bracket and handle assembly and rotating it to the desired position.

Weight (Mass):

7.8 lb (3,5 kg).

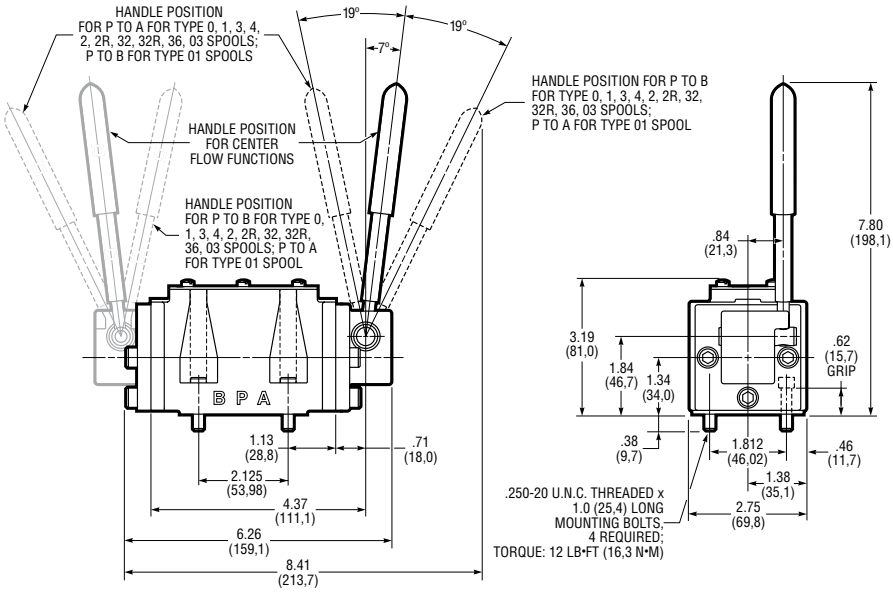

6100 Series, Manual Lever Operated

Hydraulic Pilot Operated

Overall length of single actuator configuration (not shown) is 6.60 inches (167,6 mm).

Weight (Mass):

Single Actuator, 7.1 lb (3,2 kg);
Double Actuator, 7.8 lb (3,5 kg).

Air Piloted Models

Overall length of single actuator configuration (not shown) is 7.13 inches (167,6 mm).

Weight (Mass):

Single Actuator, 8.0 lb (3,6 kg);
Double Actuator, 9.5 lb (4,3 kg).

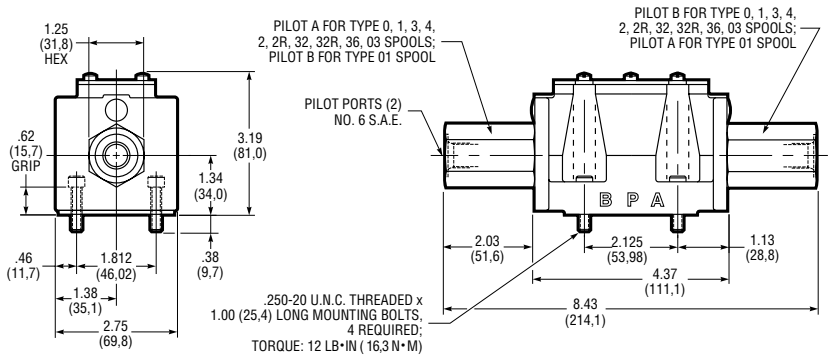

6800 Series, Double Hydraulic Piloted Models

D05 SUBPLATE AND BOLT KITS

Part Number	Description
Subplates:	
P23-D05-.50	Bottom Ports, 1/2-14 N.P.T.F.
P28-D05-.75	Bottom Ports, 3/4-14 N.P.T.F.
P28-D05-SAE12	Bottom Ports, No. 12 S.A.E.
PSO11-D05-.50	Side Ports, 1/2-14 N.P.T.F.
PSO28-D05-.75	Side Ports, 3/4-14 N.P.T.F.
PSO11-D05-SAE8	Side Ports, No. 8 S.A.E.
PSO28-D05-SAE12	Side Ports, No. 12 S.A.E.
Bolt Kit:	
P22-BK	Four .250-20 U.N.C. Threaded x 1.00 inch (25,4 mm)

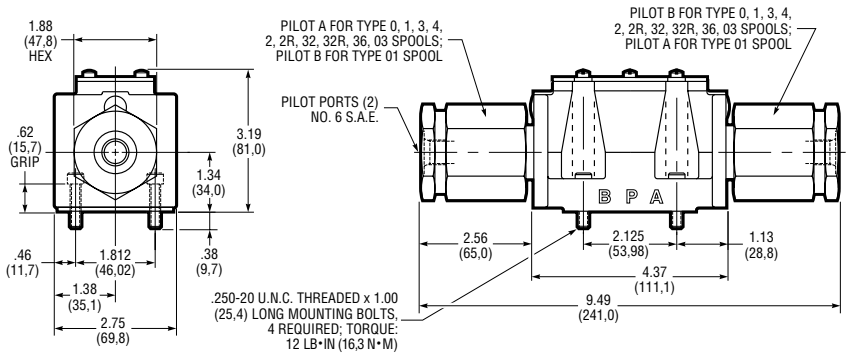

6900 Series, Double Air Piloted Models

TYPICAL MODEL CODE

6 5 4 0 – D05 – 115DF – R – T – ✳ – 1 0

Valve Type	
6	Subplate Mounted Directional Control

Actuator	
1	Manual Lever
5	Solenoid Operated
8	Hydraulic Piloted
9	Air Piloted

Internal Operator	
1	Two Position: Spring Offset (P→B), Actuator Offset (P→A)
2	Two Position: Spring Offset (P→A), Actuator Offset (P→B)
3	Two Position: Actuator Offset, Detented;① Three Position: Detented (Manual Lever Only)
4	Two Position: Spring Centered, Actuator Offset②③
5	Three Position: Spring Centered, Actuator Offset
6	Two Position: Spring Offset, Actuator Centered②④
7	Two Position: Detented (Manual Lever Only)

① *Only available with Type 0, 1 and 03 spools.*
② *Not available with Manual Lever valves.*
③ *For most spools, normal flow is actuator offset P→A. For Spool Type 01 (tandem center) normal flow is actuator offset P→B.*
④ *For most spools, normal flow is spring offset P→B. For Spool Type 01 (tandem center) normal flow is spring offset P→A.*

Spools			
0	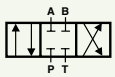	2①	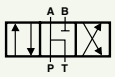
1	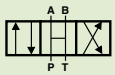	2R①	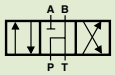
3①	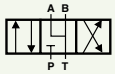	32①	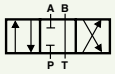
4①	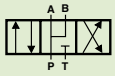	32R①	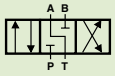
01①②	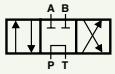	36①	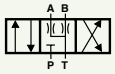
		03	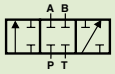

① *Not available with Type 3 Internal Operators (except Manual Lever models).*
② *Closed Crossover.*

Valve Size	
D05	N.F.P.A. D05 (CETOP 5) Mounting Pattern

Reverse Flow Option	
R	Reverse Flow (Code 4 and Code 6 Internal Operators Only)

Lever Position (Manual Models Only)	
A12	12 o'clock positon, port "A" end
A3	3 o'clock positon, port "A" end
A6	6 o'clock positon, port "A" end
A9	9 o'clock positon, port "A" end
B12	12 o'clock positon, port "B" end
B3	3 o'clock positon, port "B" end
B6	6 o'clock positon, port "B" end
B9	9 o'clock positon, port "B" end

Solenoid Options	
BH3A	3-pin Connector for single solenoid models on port "A" end ①②③
BH3B	3-pin Connector for single solenoid models on port "B" end ①②③
BH5A	5-pin Connector for single or double solenoid models on port "A" end①②③
BH5B	5-pin Connector for single or double solenoid models on port "B" end①②③
C	CSA and UL Recognized Coils (Etched with Symbol)④
CG	Cable Grip for .38 to .44 inch (9,5 to 11,1 mm) O.D. machine tool cable①②
HT	High Pressure Tank Port: 2300 psi (160 bar) maximum AC models; 3000 psi (210 bar) maximum DC models
M	Hand Actuated Manual Override①
SL	Solenoid Lights (available 115DF AC only)①②
T	Terminal Strip①②

① *Option not available with "EP" solenoid models.*
② *Option not available with "Plug-In Terminal" solenoid models.*
③ *N.F.P.A. standard T3.539-1980; A.N.S.I. standard B93.55M-1981.*
④ *Available with 115DF solenoids only.*

Electrical (Solenoid Options)			
Standard AC Solenoids (Dual Frequency):		*Standard DC Solenoids:*	
24DF	24V/60Hz, 24V/50Hz	12DC	12VDC
115DF	115V/60HZ, 110V/50Hz	24DC	24VDC
230DF	230V/60Hz, 220V/50Hz	250DC	250VDC
460DF	460V/60Hz, 440V/50Hz		
Plug-In Terminal AC Solenoids:①		*Plug-In Terminal DC Solenoids:①*	
115HA	115V/60Hz, 110V/50Hz	12HD	12VDC
230HA	230V/60Hz, 220V/50Hz	24HD	24VDC
Explosion-Proof AC Solenoids:		*Explosion-Proof DC Solenoids:*	
115EP	115V/60Hz	12EP	12VDC
110EP	110V/50Hz	24EP	24VDC
220EP	220V/50Hz		

① *Fits DIN Connector Standard 43650 Form A ("Hirschmann" type).*

HIGH PRESSURE HP05 PATTERN

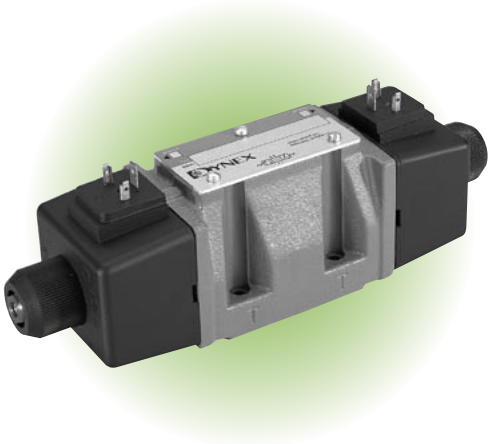

VALVE DESCRIPTION

HP05 valves operate at pressures to 8000 psi (560 bar), 60% higher than most other conventional subplate mounted valves.

These compact sliding-spool valves provide true four-way control in a simple compact package. A range of actuators, spools, internal operators and electrical options provides design flexibility.

Low pressure drop is enhanced with the use of the Dynex standard subplate, which takes advantage of this valve's special double tank port design.

For a description of spools, operators and application information, refer to pages 4-6.

Mounting

Special HP05 pattern. Refer to page 27.

Actuator Options

6500 Series: Direct Solenoid;
6800 Series: Hydraulic Piloted;
6900 Series: Air Piloted.

Rated Flow

5 U.S. gpm (19 L/min) nominal. Flows to 25 U.S. gpm (95 L/min) are possible with some models. See "Valve Flow Capacity".

Rated Pressure

8000 psi (560 bar).

Tank Port Pressure (Maximum)

Solenoid Actuated Models:
Standard,
1500 psi (70 bar);
High Pressure Option ("HT"),
AC models, 2000 psi (140 bar);
DC models, 2500 psi (170 bar).

Hydraulic and air actuated models:
3000 psi (210 bar).

Flow Capacity – Solenoid Models

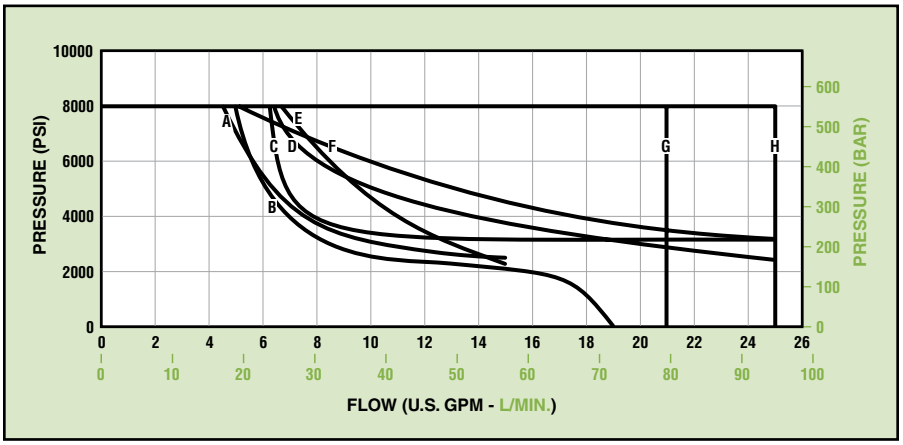

Flow Curve Reference

Solenoid Type	Spool Type						
	0	20	1	21	3	4	03
AC	H	B	G	C	F	H	A
DC and "EP"	H	B	H	C	D	H	E

Response Time (Full Stroke)

Solenoid Energized:
AC, 10-20 ms; DC, 25-35 ms.
Spring Returned:
AC, 15-20 ms; DC, 30-40 ms.

Solenoid Options

Models are available with standard AC or DC solenoids. Optional Plug-In-Terminal Solenoids fit DIN Connector, Standard 43650 Form A ("Hirschmann" type).

For electrical specifications, see page 6.

Electrical Connections

Standard Wiring Box with UL listed and CSA approved wire leads;

Optional Terminal Strip, Cable Grip or Pin Connector (N.F.P.A. standard T3.5-29-1980; A.N.S.I. standard B93,55M-1981).

Explosion Proof Option ("EP")

Solenoids with special enclosures are approved by UL and CSA for use in hazardous locations. Available with AC or DC solenoids.

UL Classification:
Class I, Group C, D;
Class II, Group E, F, G.

CSA/UL Recognized ("C" Option)

Solenoid coils are printed with the symbol:

(CSA and UL Recognized)

This option is available with "115DF" standard AC solenoids only. For availability with other voltages, contact the Dynex sales department.

VALVE FLOW CAPACITY

Flow capacity depends on valve actuator, internal operator and spool type.

Solenoid Models

The flow capacity curves, above, show typical performance for each interanl operator and spool type. The letters in the "Flow Curve Reference" table identify the appropriate curve.

Pilot Operated Models

The nominal flow capacity for most pilot operated valves is 10 U.S. gpm (38 L/min).

Maximum flow for pilot operated valves is dependent on pilot pressure.

Minimum Pilot Pressure:

Hydraulic, 500 psi (35 bar);
Air, 75 psi (5 bar).

Maximum Pilot Pressure:

Hydraulic, 3000 psi (210 bar);
Air, 200 psi (14 bar).

Required Volume (to shift spool full stroke):

Hydraulic, 0.014 in^3 (0,23 cm^3);
Air, 0.220 in^3 (3,61 cm^3).

VALVE EFFICIENCY

HP05 valves provide exceptionally low pressure drop, as shown in the performance curves. The values indicate typical performance using the Dynex standard subplate, which takes advantage of the valve's special double tank port design.

Flow may be limited for certain spools. See "Flow Capacity" curves on page 25.

Determining Pressure Drop

The curves show typical resistance to flow for various spool types. The table identifies the proper pressure drop curve for each spool and flow path.

An Example

In the table under spool Type 1, curve "D" is called out to determine the pressure drop for P→A. Looking at the curves, "D" indicates a drop of about 28 psi at 12 U.S. gpm (1,9 bar at 45 L/min).

To determine total "loop" drop, the individual pressure drops for P→A and B→T (or P→B and A→T) must be added.

Pressure Drop (ΔP)

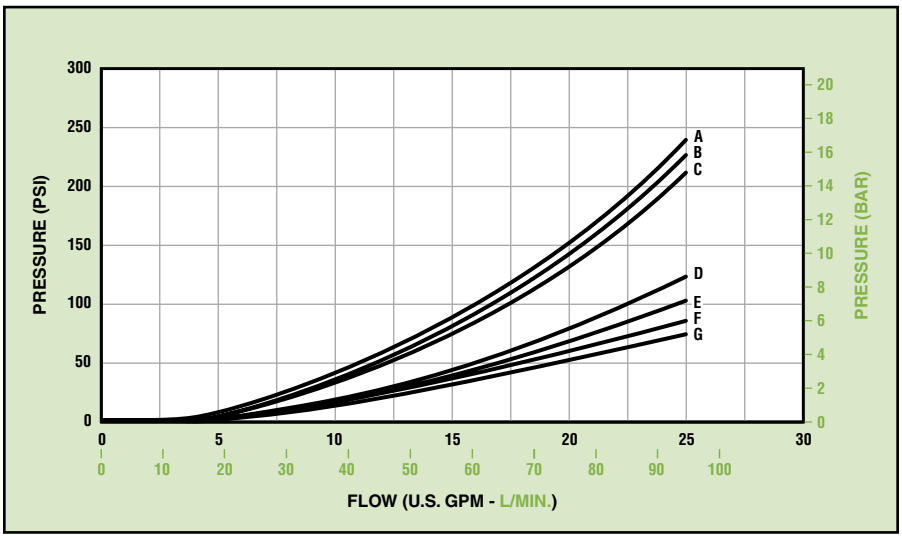

Flow Curve Reference

Flow Path	Spool Type 0	20	1	21	3	4	03
P→A	B	B	C	C	A	C	B
P→B	B	B	C	C	A	C	B
A→T	D	D	G	D	F	E	–
B→T	D	D	G	D	F	E	–
P→T	–	–	B	–	–	–	–

INSTALLATION AND DIMENSIONS

Special Valve Mounting

Although similar to standard N.F.P.A. D05 (CETOP 5) valves in size, HP05 valves require a special high pressure mounting pattern.

These valves have a second "T" port into a common tank passageway for lower pressure drop. The mounting surface drawing shows the HP05 pattern with the optional second "T" port.

Port o-rings are included with valves.

Mounting bolts must be ordered separately: 0.3125-18 U.N.C. Threaded x 1.00 inch (24,5 mm), Grade 8 or better, four required. Recommended mounting torque is 25 lb•ft (34 N•m).

See "Subplate and Bolt Kits" on page 28.

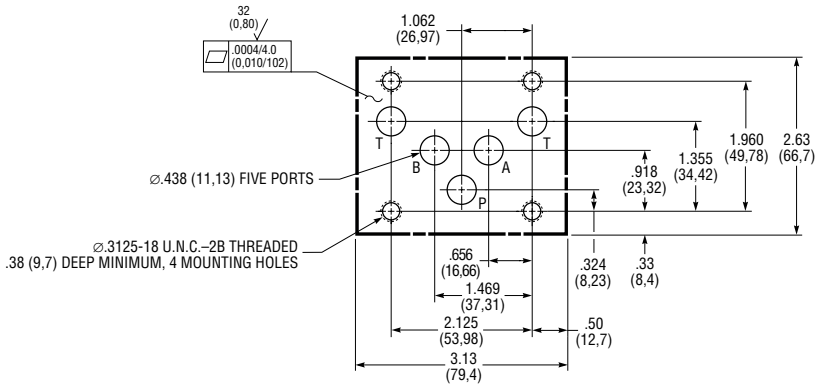

Minimum Mounting Surface, Special HP05 Pattern with Two Ports (T) into Common Tank Passageway

Solenoid Model Dimensions

Dimensions are shown for both AC and DC solenoids. DC configuration is shown printed in gray.

The overall length of a single solenoid model (not shown) is 7.67 inches (194,8 mm) AC and 9.02 inches (229,11 mm) DC.

Weight (Mass):

Single Solenoid,
AC, 8.1 lb (3,7 kg);
DC, 9.5 lb (4,3 kg).

Double Solenoid,
AC, 9.6 lb (4,4 kg);
DC, 12.6 lb (5,7 kg).

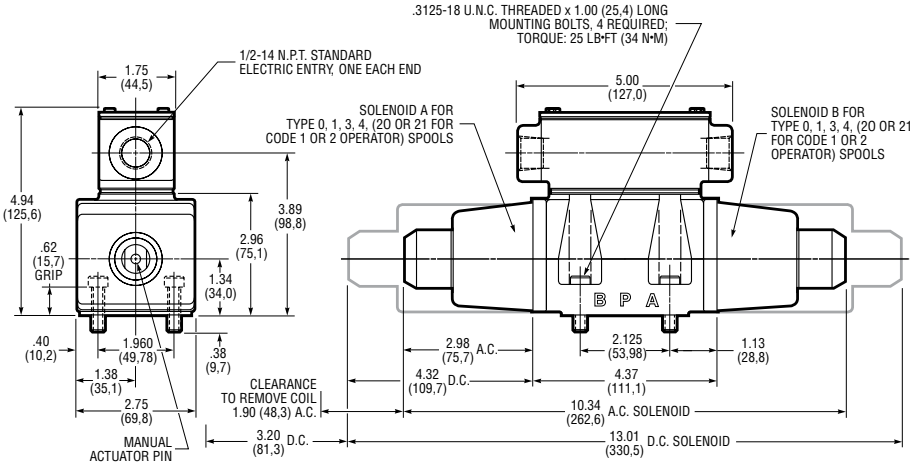

6500 Series, Double Solenoid Models

Explosion Proof Solenoids

"EP" solenoids with special enclosures are approved by UL and CSA for use in hazardous locations.

Overall length of single solenoid models (not shown) is 9.31 inches (236,5 mm).

A kit with a spacer plate and bolts (part number KV00501066) is required when valves are mounted on manifolds, side outlet subplates or when used as a pilot valve.

Weight (Mass):

Single Solenoid, 15.7 lb (7,1 kg);
Double Solenoid, 24.8 lb (11,2 kg).

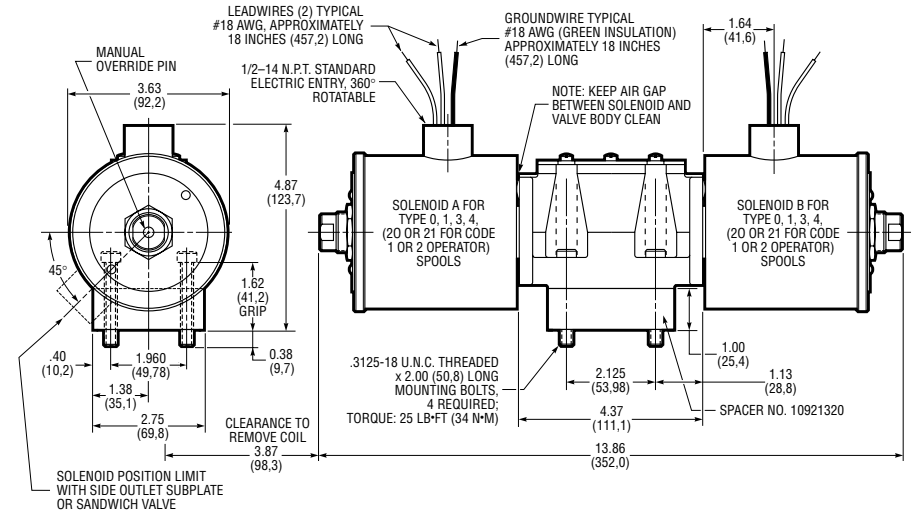

6500 Series, Double "EP" Solenoid Models

Hydraulic Pilot Operated

Overall length of single actuator configuration (not shown) is 6.60 inches (167,6 mm).

Weight (Mass):

Single Actuator, 7.1 lb (3,2 kg);
Double Actuator, 7.8 lb (3,5 kg).

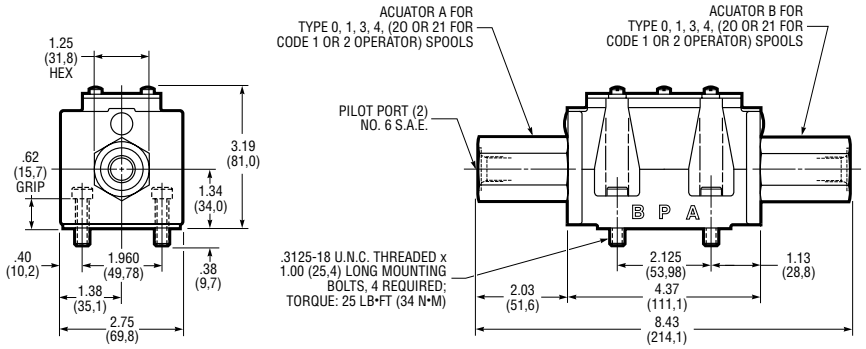

6800 Series, Double Hydraulic Piloted Models

Air Piloted Models

Overall length of single actuator configuration (not shown) is 7.13 inches (118,1 mm).

Weight (Mass):

Single Actuator, 8.0 lb (3,6 kg);
Double Actuator, 9.5 lb (4,3 kg).

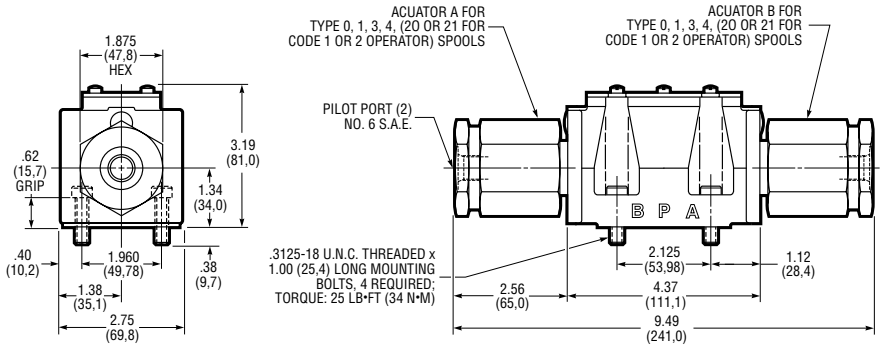

6900 Series, Double Air Piloted Models

HP05 SUBPLATE AND BOLT KITS

Part Number	Description
Subplates:	
PSO31-HP05-SAE12	Side Ports, No. 12 S.A.E.
PSO31-HP05-BSP12	Side Ports, G 3/4 (B.S.P.)
PSO31-HP05-.75MP①	Side Ports, 3/4 Medium Pressure Coned and Threaded, 3/4-14 N.P.S.M.
Mounting Bolts:	
P31-BK-16	Four .3125-18 U.N.C. Threaded x 1.00 inch (25,4 mm)

① *Port uses Autoclave Medium Pressure, Butech M/P or equivalent fitting.*

TYPICAL MODEL CODE

6 5 4 0 – HP05 – 115DF – R – C – 2 0

Valve Type	
6	Subplate Mounted Directional Control

Actuator	
5	Solenoid Operated
8	Hydraulic Piloted
9	Air Piloted

Internal Operator	
1	Two Position: Spring Offset (P→B), Actuator Offset (P→A)①
2	Two Position: Spring Offset (P→A), Actuator Offset (P→B)①
3	Two Position: Actuator Offset, Detented②
4	Two Position: Spring Centered, Actuator Offset③
5	Three Position: Spring Centered, Actuator Offset
6	Two Position: Spring Offset, Actuator Centered④

① *Only available with Type 20 and 21 spools.*
② *Only available with Type 0, 1 and 03 spools*
③ *For most spools, normal flow is actuator offset P→A. For Spool Type 01 (tandem center) normal flow is actuator offset P→B.*
④ *For most spools, normal flow is spring offset P→B. For Spool Type 01 (tandem center) normal flow is spring offset P→A.*

Spools	
0,20①	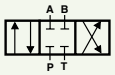
1,21①	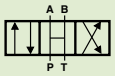
3②	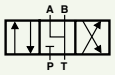
4②	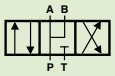
03	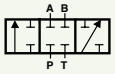

① *Code 1 or 2 Operators only use Type 20 or 21 spools. These spools provide the same function, but are not interchangeable with Type 0 or 1 spools.*
② *Not available with Type 3 Internal Operator.*

Valve Size	
HP05	High Pressure Special Mounting Pattern

Reverse Flow Option	
R	Reverse Flow (Code 4 and Code 6 Internal Operators Only)

Design Number

Modification Number

Solenoid Options	
BH3A	3-pin Connector for single solenoid models on port "A" end ①②③
BH3B	3-pin Connector for single solenoid models on port "B" end ①②③
BH5A	5-pin Connector for single or double solenoid models on port "A" end①②③
BH5B	5-pin Connector for single or double solenoid models on port "B" end①②③
C	CSA and UL Recognized Coils (Etched with Symbol)④
CG	Cable Grip for .38 to .44 inch (9,5 to 11,1 mm) O.D. machine tool cable①②
HT	High Pressure Tank Port: 2300 psi (160 bar) maximum AC models; 3000 psi (210 bar) maximum DC models
M	Hand Actuated Manual Override①
SL	Solenoid Lights (available 115DF AC only)①②
T	Terminal Strip①②

① *Option not available with "EP" solenoid models.*
② *Option not available with "Plug-In Terminal" solenoid models.*
③ *N.F.P.A. standard T3.539-1980; A.N.S.I. standard B93.55M-1981.*
④ *Available with 115DF solenoids only.*

Electrical (Solenoid Options)			
Standard AC Solenoids (Dual Frequency):		*Standard DC Solenoids:*	
24DF	24V/60Hz, 24V/50Hz	**12DC**	12VDC
115DF	115V/60HZ, 110V/50Hz	**24DC**	24VDC
230DF	230V/60Hz, 220V/50Hz	**250DC**	250VDC
460DF	460V/60Hz, 440V/50Hz		
Plug-In Terminal AC Solenoids:①		*Plug-In Terminal DC Solenoids:①*	
115HA	115V/60Hz, 110V/50Hz	**12HD**	12VDC
230HA	230V/60Hz, 220V/50Hz	**24HD**	24VDC
Explosion-Proof AC Solenoids:		*Explosion-Proof DC Solenoids:*	
115EP	115V/60Hz	**12EP**	12VDC
110EP	110V/50Hz	**24EP**	24VDC
220EP	220V/50Hz		

① *Fits DIN Connector Standard 43650 Form A ("Hirschmann" type).*

D05H SIZE

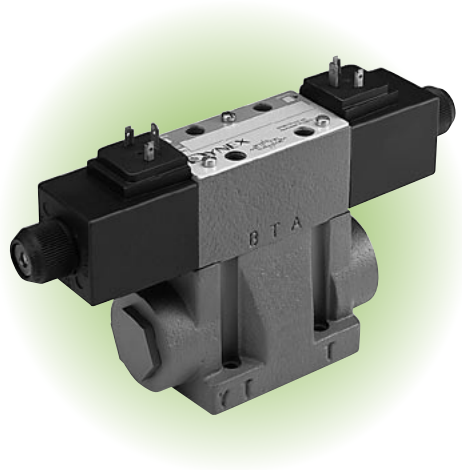

VALVE DESCRIPTION

D05H valves provide high flow capability, one-third greater than D05 valves.

The valve's low pressure drop is enhanced with the use of the Dynex standard subplate, which takes advantage of the valve's special double tank port design.

For a description of spools, operators and application information, refer to pages 4-6.

Mounting

Subplate, N.F.P.A. D05 (CETOP 5) pattern, with auxiliary "X" and "Y" ports for external pilot and drain.

Rated Flow

30 U.S. gpm (114 L/min) nominal;
40 U.S. gpm (151 L/min) maximum for most spool types.

Models with Type 56 or 58 are rated for 15 gpm (57 L/min) maximum. For higher flows, contact the sales department.

Rated Pressure

5000 psi (350 bar).

Tank Port Pressure (Maximum)

Standard External Drain:
5000 psi (350 bar).

Internal Drain ("ID" Option):
Solenoid models, 1500 psi (105 bar);
Solenoid models with "HT" Option,
AC models, 2300 psi (160 bar),
DC models, 3000 psi (210 bar);
Air piloted models,
3000 psi (210 bar).

Response Time (Full Stroke)

Spring Centered Models:
Solenoid Energized, 40-70 ms.
Spring Returned, 40-45 ms.

Spring Offset Models:
Solenoid Energized, 50-55 ms.
Spring Returned, 85 ms.

Pressure Drop (ΔP)

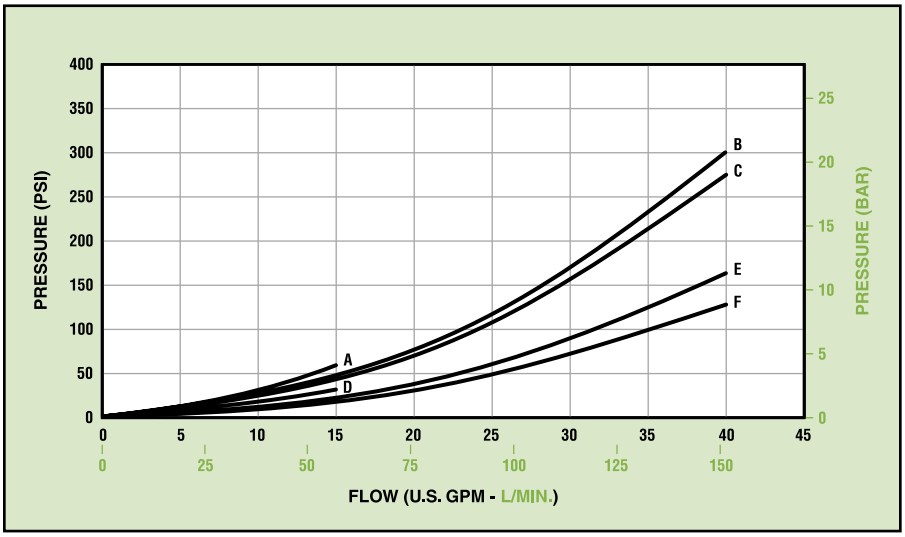

Flow Curve Reference

Flow Path	Spool Type 5	6	8	9	56①	58①
P→A	B	C	B	B	C	C
P→B	B	C	B	B	C	C
A→T	E	F	F	E	D	D
B→T	E	F	F	E	D	D
P→T	–	C	–	–	A	A

① *Models with Type 56 and 59 spools are rated for 15 U.S. gpm (57 L/min) maximum flow.*

6600 Series Solenoid Piloted Models

Pilot Pressure:
Minimum, 65 psi (5 bar);
Maximum, 5000 psi (350 bar).

Solenoids:
These models use a D03 valve as a pilot. Models are available with standard AC or DC solenoids. Optional Plug-In-Terminal Solenoids fit DIN Connector, Standard 43650 Form A ("Hirschmann" type).

Refer to page 9 for "Electrical Connections" and "Explosion Proof Option".

6800 Series Hydraulic Piloted Models

Pilot Pressure:
Minimum, 100 psi (7 bar), except models with Code 5 internal operator, 85 psi (6 bar);
Maximum, 3000 psi (210 bar).

Required Volume (to shift spool full stroke):
0.21 in^3 (3,4 cm^3).

6900 Series Air Piloted Models

These models use an air piloted D03 valves as a pilot.

Air Pilot Pressure:
Minimum, 40 psi (3 bar);
Maximum, 200 psi (14 bar).

Required Volume (to shift spool full stroke):
0.22 in^3 (3,6 cm^3).

VALVE EFFICIENCY

Efficiency for all models is shown by the typical performance curves, above. The table identifies the appropriate pressure drop curve for each spool and flow path.

For example, In the table under spool Type 5, curve "B" is called out to determine the pressure drop for P→A. Looking at the curves, "B" indicates a drop of about 165 psi at 30 U.S. gpm (11,4 bar at 114 L/min).

To determine total "loop" drop, the individual pressure drops for P→A and B→T (or P→B and A→T) must be added.

INSTALLATION AND DIMENSIONS

Valve Mounting

D05H valves have a second "T" port into a common tank passageway, for lower pressure drop. The mounting surface drawing shows the standard N.F.P.A. pattern, with auxiliary "X" and "Y" ports for external pilot and drain.

Port o-rings are included with valves.

Mounting bolts must be ordered separately: .250-20 U.N.C. Threaded x 1.00 inch (25,4 mm), Grade 8 or better, four required. Recommended mounting torque is 12 lb•ft (16 N•m).

Pilot and Drain Options

The "Section X-X" drawing shows the location of the orifice for standard internal pilot, and plug for standard external drain on solenoid and air piloted models.

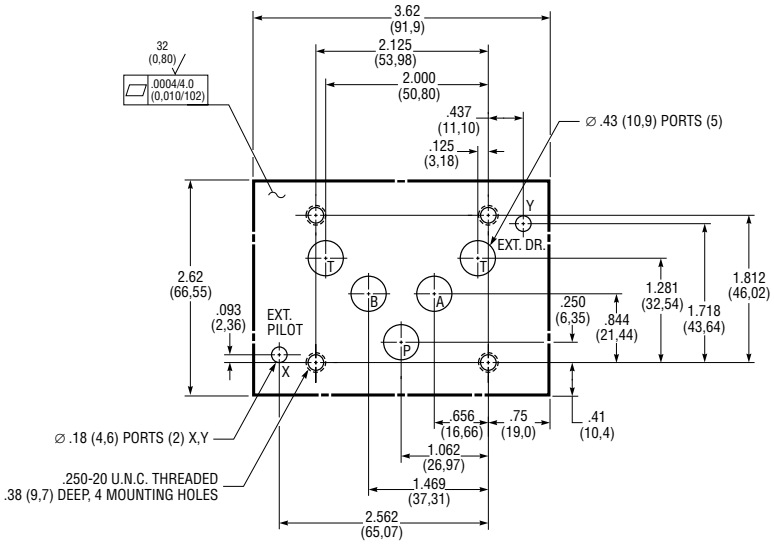

Recommended Minimum Mounting Surface, N.F.P.A. D05 (CETOP 5) Pattern With Auxiliary "X" and "Y" ports and Two Ports (T) Into Common Tank Passageway

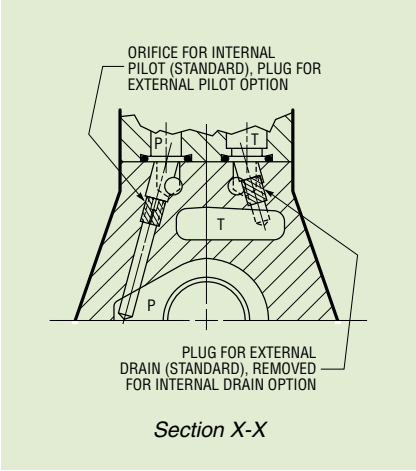

Section X-X

Solenoid Model Dimensions

Dimensions are shown for both AC and DC solenoids. DC configuration is shown printed in gray.

The overall length of a single solenoid model (not shown) is 7.00 inches (177,8 mm) AC and 7.62 inches (193,5 mm) DC.

Weight (Mass):

Single Solenoid,
AC, 9.3 lb (4,2 kg);
DC, 9.8 lb (4,4 kg).

Double Solenoid,
AC, 10.0 lb (4,5 kg);
DC, 11.3 lb (5,1 kg).

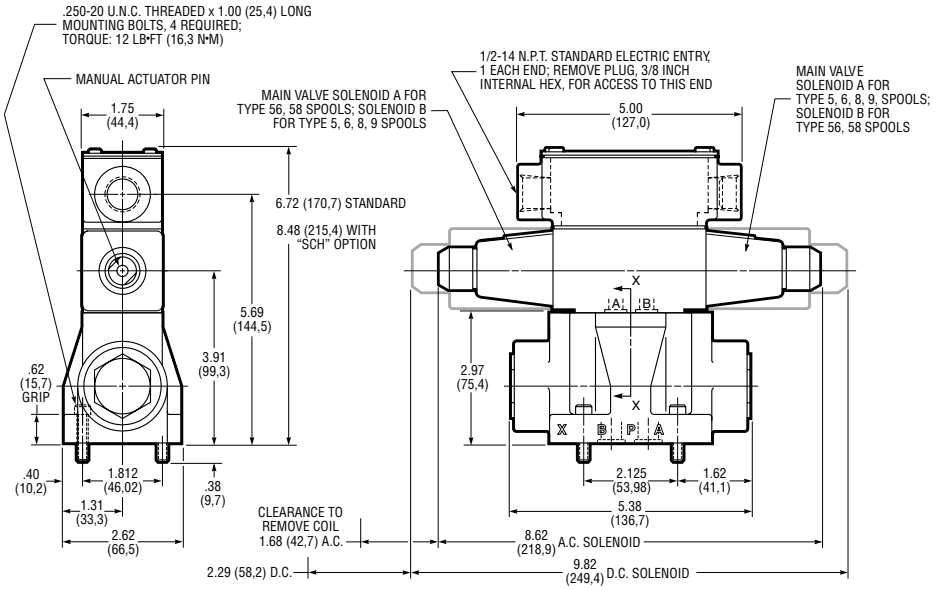

6600 Series, Double Solenoid Piloted Models

Explosion Proof Solenoids

"EP" solenoids with special enclosures are approved by UL and CSA for use in hazardous locations. Overall length of single solenoid models (not shown) is 8.90 inches (226,1 mm).

Weight (Mass):

Single Solenoid, 14.3 lb (6,5 kg);
Double Solenoid, 20.0 lb (9,1 kg).

Direct Hydraulic Pilot Operated

As shown, these models use a cross-over block to direct pilot pressure from auxiliary ports "X" and "Y".

Weight (Mass):

6.0 lb (2,7 kg).

"X" and "Y" Port Function

Model	Port "X"	Port "Y"
681✳	Actuator A	External Drain
682✳	External Drain	Actuator B
685✳	Actuator A for: Type 5, 6, 8, 9 Actuator B for: Type 56, 58	Actuator B for: Type 5, 6, 8, 9 Actuator A for: Type 56, 58

Air Piloted Models

Overall length of single actuator configuration (not shown) is 6.24 inches (158,5 mm).

Weight (Mass):

Single Actuator, 8.4 lb (3,8 kg);
Double Actuator, 9.1 lb (4,1 kg).

D05H SUBPLATE AND BOLT KITS

Part Number	Description
Subplates:	
P22-D05H-.75	Bottom Ports, 3/4-14 N.P.T.F.
PSO22-D05H-.75	Side Ports, 3/4-14 N.P.T.F.
Bolt Kit:	
P22-BK	Four .250-20 U.N.C. Threaded x 1.00 inch (25,4 mm)

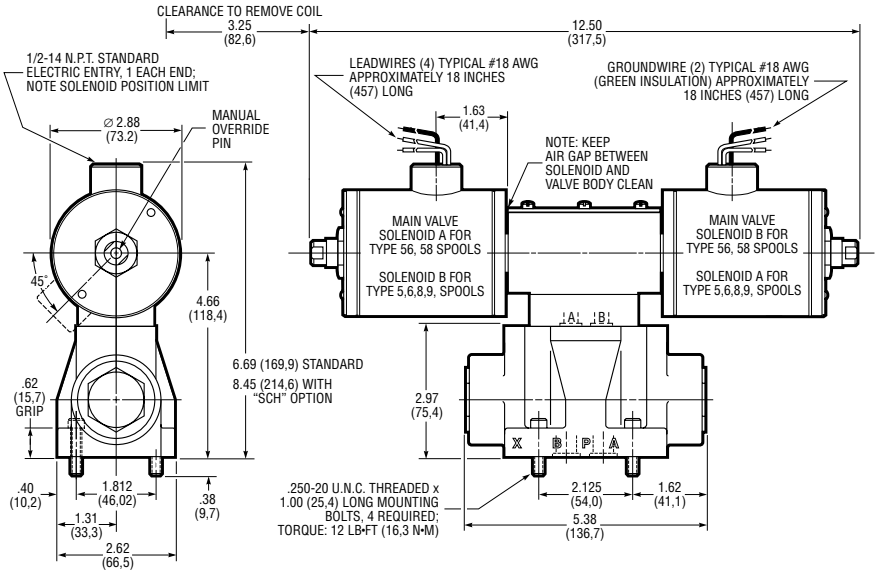

6600 Series, Double "EP" Solenoid Models

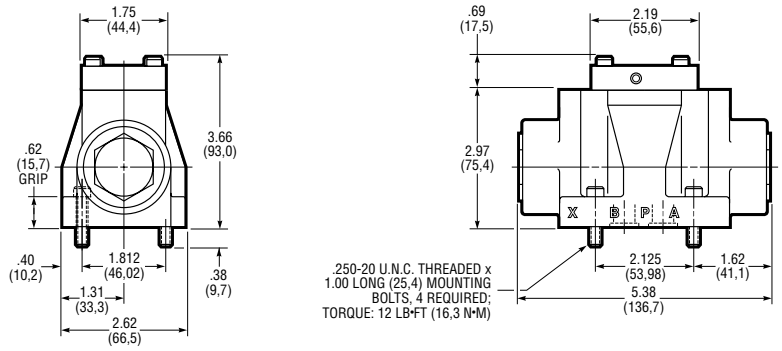

6800 Series, Direct Hydraulic Piloted Models

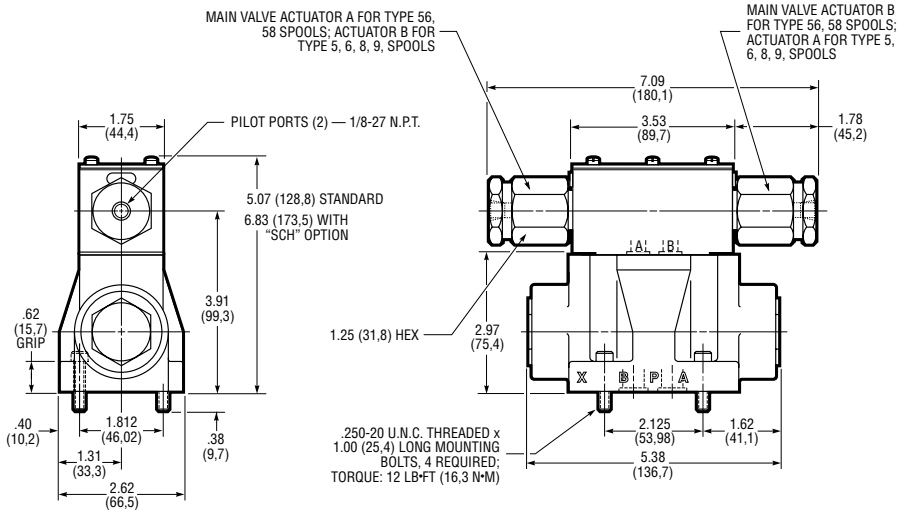

6900 Series, Double Air Piloted Models

TYPICAL MODEL CODE

6 6 4 5 – D05H – 115DF – R – T – CH – 1 0

Valve Type	
6	Subplate Mounted Directional Control

Actuator	
6	Solenoid Operated
8	Hydraulic Piloted
9	Air Piloted

Internal Operator	
1	Two Position: Spring Offset (P→B), Actuator Offset (P→A)
2	Two Position: Spring Offset (P→A), Actuator Offset (P→B)
3	Two Position: Actuator Offset, Detented
4	Two Position: Spring Centered, Actuator Offset①
5	Three Position: Spring Centered, Actuator Offset

① *For most spools, normal flow is actuator offset P→A. For Spool Types 56 or 58, normal flow is actuator offset P→B.*

Spools	
5	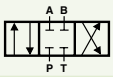
6	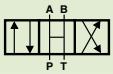
8	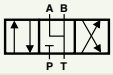
9	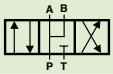
56①	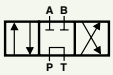
58②	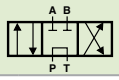

① *Closed Crossover*
② *Open Crossover*

Valve Size	
D05H	N.F.P.A. D05 (CETOP 5) Mounting Pattern with auxiliary "X" port (external pilot) and "Y" port (external drain)

Reverse Flow Option	
R	Reverse Flow (Code 4 Operator Only)

Solenoid Options	
BH3A	3-pin Connector for single solenoid models on port "A" end ①②③
BH3B	3-pin Connector for single solenoid models on port "B" end ①②③
BH5A	5-pin Connector for single or double solenoid models on port "A" end①②③
BH5B	5-pin Connector for single or double solenoid models on port "B" end①②③
C	CSA and UL Recognized Coils (Etched with Symbol)④
CG	Cable Grip for .38 to .44 inch (9,5 to 11,1 mm) O.D. machine tool cable①②
HT	High Pressure Tank Port: 2300 psi (160 bar) maximum AC models; 3000 psi (210 bar) maximum DC models
M	Hand Actuated Manual Override①
SL	Solenoid Lights (available 115DF AC only)①②
T	Terminal Strip①②

① *Option not available with "EP" solenoid models.*
② *Option not available with "Plug-In Terminal" solenoid models.*
③ *N.F.P.A. standard T3.539-1980; A.N.S.I. standard B93.55M-1981.*
④ *Available with 115DF solenoids only.*

General Options①	
CH	Flow Control (Pilot Choke) – 3000 psi (210 bar) maximum pressure
ID	Internal Drain
XP	External Pilot

① *Not available with hydraulic piloted models.*

Electrical Options			
Standard AC Solenoids (Dual Frequency):		*Standard DC Solenoids:*	
24DF	24V/60Hz, 24V/50Hz	12DC	12VDC
115DF	115V/60HZ, 110V/50Hz	24DC	24VDC
230DF	230V/60Hz, 220V/50Hz		
460DF	460V/60Hz, 440V/50Hz		
Plug-In Terminal AC Solenoids:①		*Plug-In Terminal DC Solenoids:①*	
115HA	115V/60Hz, 110V/50Hz	12HD	12VDC
230HA	230V/60Hz, 220V/50Hz	24HD	24VDC
Explosion-Proof AC Solenoids:		*Explosion-Proof DC Solenoids:*	
115EP	115V/60Hz	12EP	12VDC
110EP	110V/50Hz	24EP	24VDC
220EP	220V/50Hz		

① *Fits DIN Connector Standard 43650 Form A ("Hirschmann" type).*

D08 PATTERN

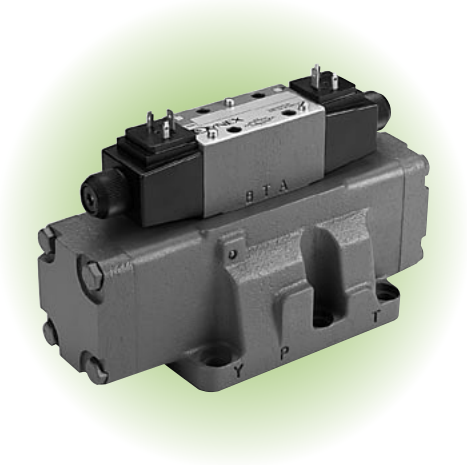

VALVE DESCRIPTION

D08 valves are available with a full range of actuators, spools and electrical options, including lever actuated models.

An optional spool stroke adjustment controls the limit of spool travel. This provides manual control of the valve's metering characteristics. See page 37.

For a description of spools, operators and application information, refer to pages 4-6.

Mounting

Subplate, N.F.P.A. D08 (CETOP 8) pattern.

Rated Flow

40 U.S. gpm (151 L/min) nominal;
90 U.S. gpm (341 L/min) maximum.

Rated Pressure

5000 psi (350 bar).

Tank Port Pressure (Maximum)

Standard External Drain:
5000 psi (350 bar).

Internal Drain ("ID" Option):
Manual models, 500 psi (35 bar);
Solenoid models, 1500 psi (105 bar);
Solenoid models with "HT" Option,
AC models, 2300 psi (160 bar),
DC models, 3000 psi (210 bar);
Air piloted models,
3000 psi (210 bar) 500 psi (35 bar).

Response Time (Full Stroke)

Spring Centered Models:
Solenoid Energized, 40-45 ms.
Spring Returned, 40 ms.

Spring Offset Models:
Solenoid Energized, 50 ms.
Spring Returned, 75 ms.

Pressure Drop (ΔP)

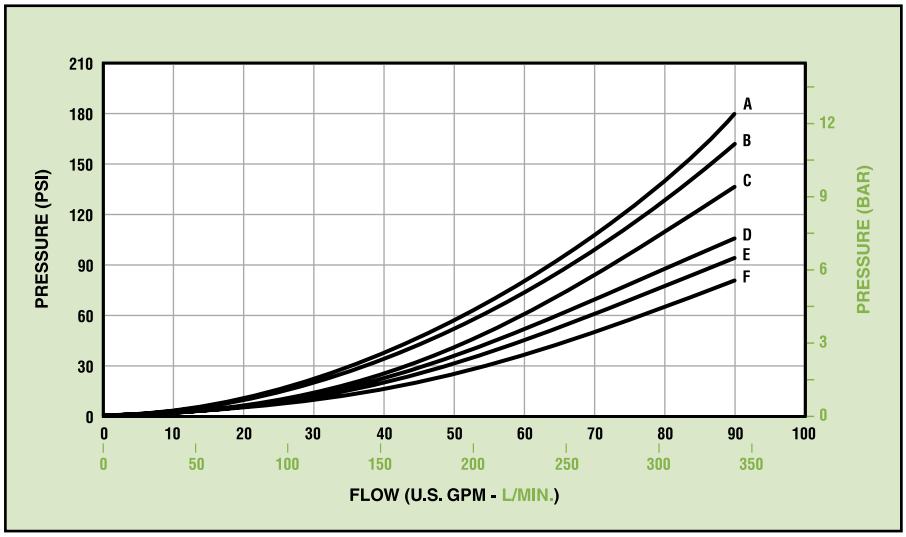

Flow Curve Reference

Flow Path	Spool Type 5	6	8	9	56	58
P→A	D	E	D	D	D	D
P→B	D	E	D	D	D	D
A→T	F	F	F	F	D	D
B→T	C	C	C	C	B	B
P→T	–	E	–	–	A	A

6600 Series Solenoid Piloted Models

Pilot Pressure:
Minimum, 65 psi (5 bar);
Maximum, 5000 psi (350 bar).

Solenoids:
These models use a D03 valve as a pilot. Models are available with standard AC or DC solenoids. Optional Plug-In-Terminal Solenoids fit DIN Connector, Standard 43650 Form A ("Hirschmann" type).

Refer to page 9 for "Electrical Connections" and "Explosion Proof Option".

6800 Series Hydraulic Piloted Models

Pilot Pressure:
Minimum, 65 psi (5 bar);
Maximum, 5000 psi (350 bar).

Required Volume (to shift spool full stroke):
1.352 in^3 (22,2 cm^3).

6900 Series Air Piloted Models

These models use an air piloted D03 valve as a pilot.

Air Pilot Pressure:
Minimum, 40 psi (3 bar);
Maximum, 200 psi (14 bar).

Required Volume (to shift spool full stroke):
0.220 in^3 (3,61 cm^3).

VALVE EFFICIENCY

Efficiency for all models is shown by the typical performance curves, above. The table identifies the appropriate pressure drop curve for each spool and flow path.

For example, in the table under spool Type 5, curve "B" is called out to determine the pressure drop for P→A. Looking at the curves, "B" indicates a drop of about 165 psi at 30 U.S. gpm (11,4 bar at 114 L/min).

To determine total "loop" drop, the individual pressure drops for P→A and B→T (or P→B and A→T) must be added.

INSTALLATION AND DIMENSIONS

Valve Mounting

The mounting surface drawing shows the minimum flush or raised surface required for the standard N.F.P.A. D08 pattern.

Port o-rings are included with valves.

Mounting bolts must be ordered separately: .500-13 U.N.C. Threaded x 1.25 inch (32 mm), Grade 8 or better, six required. Recommended mounting torque is 55 lb•ft (75 N•m).

Pilot and Drain Options

The "Section X-X" drawing shows the location of the orifice for the standard internal pilot configuration, and the plug for standard external drain on solenoid and air piloted models.

For conversion to external pilot, replace with setscrew, 10-2 U.N.C. Threaded x 0.25 inch (6.4) long, part number 10590270.

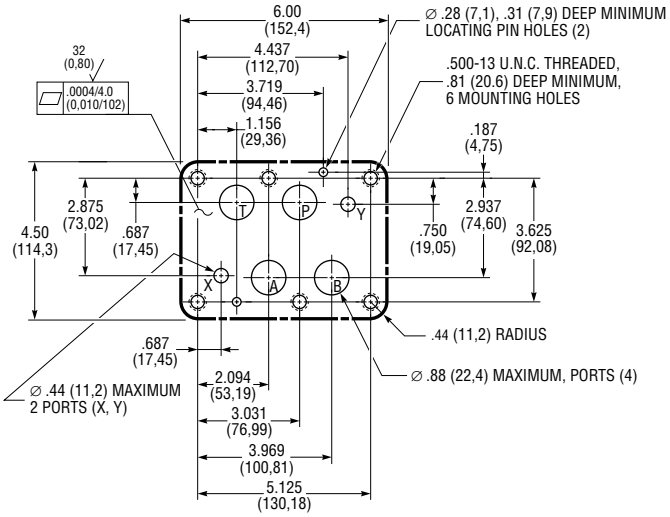

Minimum Mounting Surface, N.F.P.A. D08 (CETOP 8) Pattern

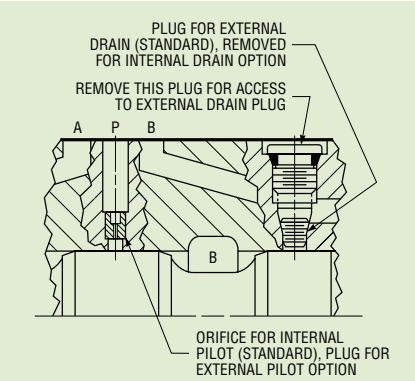

Section X-X

Solenoid Model Dimensions

Dimensions are shown for both AC and DC solenoids. DC configuration is shown printed in gray.

The overall length of a single solenoid model (not shown) is 9.91 inches (251,7 mm), the same as a double solenoid model (determined by the length of the main valve).

Weight (Mass):

Single Solenoid,
AC, 26.0 lb (11,8 kg); DC, 26.5 lb (12,0 kg).

Double Solenoid,
AC, 27.0 lb (12,2 kg); DC, 28.3 lb (12,8 kg).

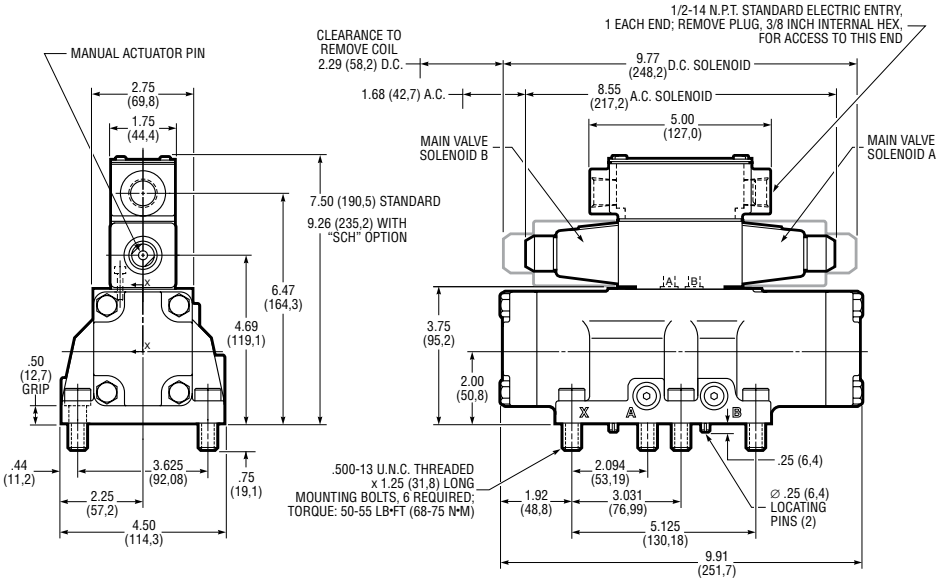

6600 Series, Double Solenoid Piloted Models

Explosion Proof Solenoids

"EP" solenoids with special enclosures are approved by UL and CSA for use in hazardous locations. Overall length of single solenoid models (not shown) is 11.18 inches (284,0 mm).

Weight (Mass):

Single Solenoid, 31 lb (14,1 kg);
Double Solenoid, 37 lb (16,8 kg).

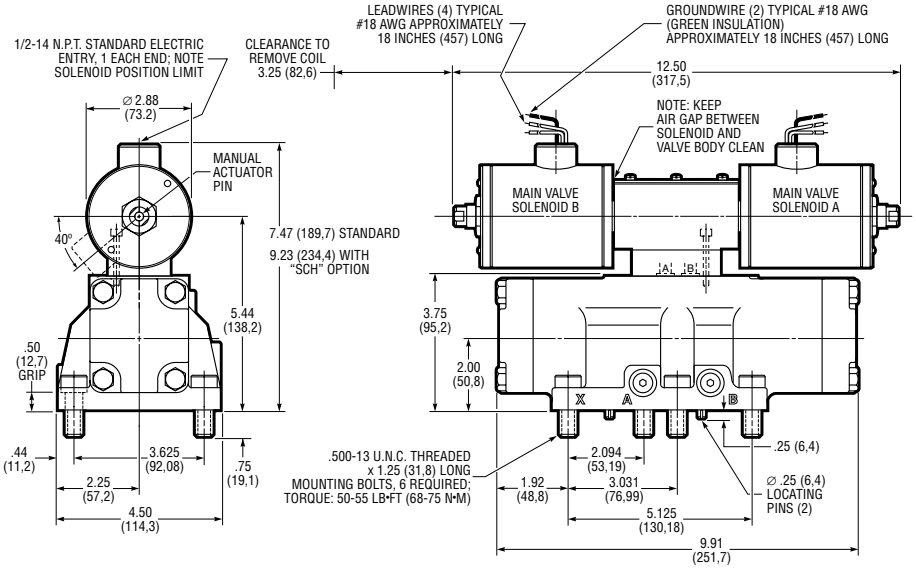

6600 Series, Double "EP" Solenoid Models

Manual Operated Models

Lever actuated valves are available in two or three position models. Models with Code 3 internal operators provide three position, detented operation. Refer to "Typical Model Code" on page 38.

Weight (Mass):

27 lb (12,2 kg).

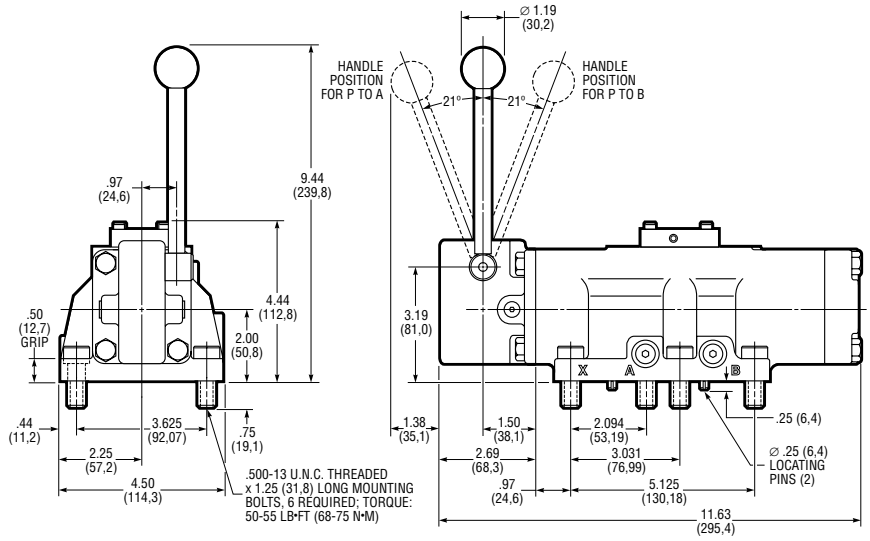

6100 Series, Mechanical Lever Models

Direct Hydraulic Pilot Operated

As shown, these models use a cross-over block to direct pilot pressure from auxiliary ports "X" and "Y".

Weight (Mass):

6.0 lb (2,7 kg).

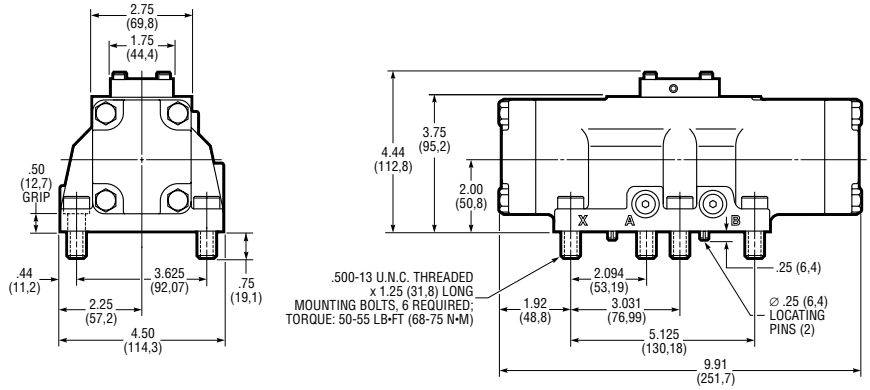

6800 Series, Direct Hydraulic Piloted

X" and "Y" Port Function

Model	Port "X"	Port "Y"
681✳	Actuator A	External Drain
682✳	External Drain	Actuator B
685✳	Actuator A	Actuator B

Air Piloted Models

Overall length of single actuator configuration (not shown) is 9.91 inches (257,7 mm), the same as a double actuator model (determined by the length of the main valve).

Weight (Mass):

Single Actuator, 24 lb (10,9 kg);
Double Actuator, 25 lb (11,3 kg).

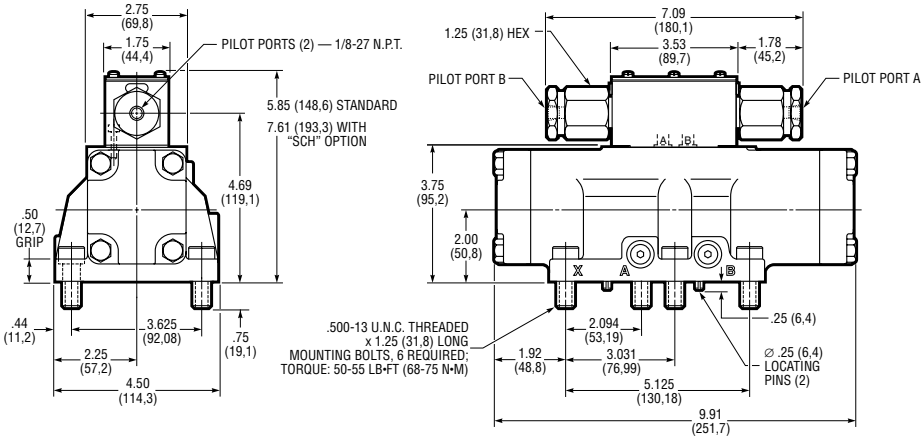

6900 Series, Direct Air Piloted

Spool Stroke Adjustment (SSA Option)

The limit of spool travel can be controlled with a spool stroke adjustment. This provides manual control of the valve's metering characteristics.

The drawing shows an end cover with "1SSA" option on the standard port "A" end of valve. The "2SSA" configuration, with adjustments on both ends, is shown printed in gray.

For single adjustment on port "B" end, contact the Dynex sales department.

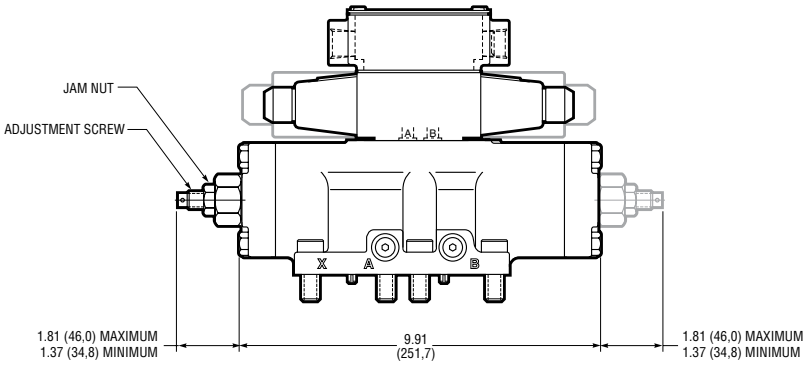

Optional Spool Stroke Adjustment

D08 SUBPLATE AND BOLT KITS

Part Number	Description
Subplates:	
P16-D08-.75	Bottom Ports, 3/4-14 N.P.T.F.
P16-D08-1	Bottom Ports, 1-11-1/2 N.P.T.F.
PSO16-D08-.75	Side Ports, 3/4-14 N.P.T.F.
PSO16-D08-1	Side Ports, 1-11-1/2 N.P.T.F.
PSO16-D08-SAE16	Side Ports, No. 16 S.A.E.
Bolt Kit:	
P16-BK-20	Six .500-13 U.N.C. Threaded x 1.25 inch (31,8 mm)

TYPICAL MODEL CODE

6 6 4 5 – D08 – 115DF – R – T – 1 0

Valve Type	
6	Subplate Mounted Directional Control

Actuator	
1	Manual Lever
6	Solenoid Operated
8	Hydraulic Piloted
9	Air Piloted

Internal Operator	
1	Two Position: Spring Offset (P→B), Actuator Offset (P→A)
2	Two Position: Spring Offset (P→A), Actuator Offset (P→B)
3	Two Position: Actuator Offset, Detented
4	Two Position: Spring Centered, Actuator Offset①
5	Three Position: Spring Centered, Actuator Offset

① *For most spools, normal flow is actuator offset P→A. For Spool Types 56 or 58, normal flow is actuator offset P→B.*

Spools	
5	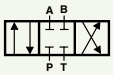
6	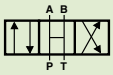
8	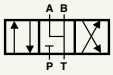
9	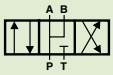
56①	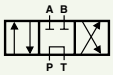
58②	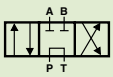

① *Closed Crossover*
② *Open Crossover*

Valve Size	
D08	N.F.P.A. D08 (CETOP 8) Mounting Pattern

Reverse Flow Option	
R	Reverse Flow (Code 4 Operator Only)

Solenoid Options	
BH3A	3-pin Connector for single solenoid models on port "A" end ①②③
BH3B	3-pin Connector for single solenoid models on port "B" end ①②③
BH5A	5-pin Connector for single or double solenoid models on port "A" end①②③
BH5B	5-pin Connector for single or double solenoid models on port "B" end①②③
C	CSA and UL Recognized Coils (Etched with Symbol)④
CG	Cable Grip for .38 to .44 inch (9,5 to 11,1 mm) O.D. machine tool cable①②
HT	High Pressure Tank Port: 2300 psi (160 bar) maximum AC models; 3000 psi (210 bar) maximum DC models
M	Hand Actuated Manual Override①
SL	Solenoid Lights (available 115DF AC only)①②
T	Terminal Strip①②

① *Option not available with "EP" solenoid models.*
② *Option not available with "Plug-In Terminal" solenoid models.*
③ *N.F.P.A. standard T3.539-1980; A.N.S.I. standard B93.55M-1981.*
④ *Available with 115DF solenoids only.*

General Options	
1SSA	Spool Stroke Adjustment on port "A" end of valve
2SSA	Spool Stroke Adjustment on both ends of valve
CH	Flow Control (Pilot Choke) – 3000 psi (210 bar) maximum pressure ①
ID	Internal Drain①
XP	External Pilot①

① *Not available with hydraulic piloted models.*

Electrical Options			
Standard AC Solenoids (Dual Frequency):		*Standard DC Solenoids:*	
24DF	24V/60Hz, 24V/50Hz	12DC	12VDC
115DF	115V/60HZ, 110V/50Hz	24DC	24VDC
230DF	230V/60Hz, 220V/50Hz		
460DF	460V/60Hz, 440V/50Hz		
Plug-In Terminal AC Solenoids:①		*Plug-In Terminal DC Solenoids:①*	
115HA	115V/60Hz, 110V/50Hz	12HD	12VDC
230HA	230V/60Hz, 220V/50Hz	24HD	24VDC
Explosion-Proof AC Solenoids:		*Explosion-Proof DC Solenoids:*	
115EP	115V/60Hz	12EP	12VDC
110EP	110V/50Hz	24EP	24VDC
220EP	220V/50Hz		

① *Fits DIN Connector Standard 43650 Form A ("Hirschmann" type).*

D08H SIZE

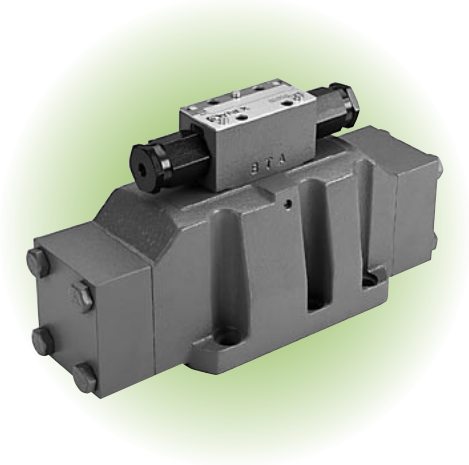

VALVE DESCRIPTION

D08H valves provide high flow capability, 80 percent greater than D08 valves.

These valves operate efficiently, with large internal flow passages and uniform flow areas throughout the body coring. Low pressure drop is enhanced with the use of the special Dynex mounting pattern with larger ports.

For a description of spools, operators and application information, refer to pages 4-6.

Mounting

Subplate, N.F.P.A. D08 (CETOP 8) pattern, with auxiliary "X" and "Y" ports for external pilot and drain.

Rated Flow

80 U.S. gpm (303 L/min) nominal;
165 U.S. gpm (625 L/min) maximum.

Rated Pressure

5000 psi (350 bar).

Tank Port Pressure (Maximum)

Standard External Drain:
5000 psi (350 bar).

Internal Drain ("ID" Option):
Solenoid models, 1500 psi (105 bar);
Solenoid models with "HT" Option,
AC models, 2300 psi (160 bar),
DC models, 3000 psi (210 bar);
Air piloted models,
3000 psi (210 bar).

Response Time (Full Stroke)

Spring Centered Models:
Solenoid Energized, 40-45 ms.
Spring Returned, 40 ms.

Spring Offset Models:
Solenoid Energized, 50 ms.
Spring Returned, 75 ms.

Pressure Drop (ΔP)

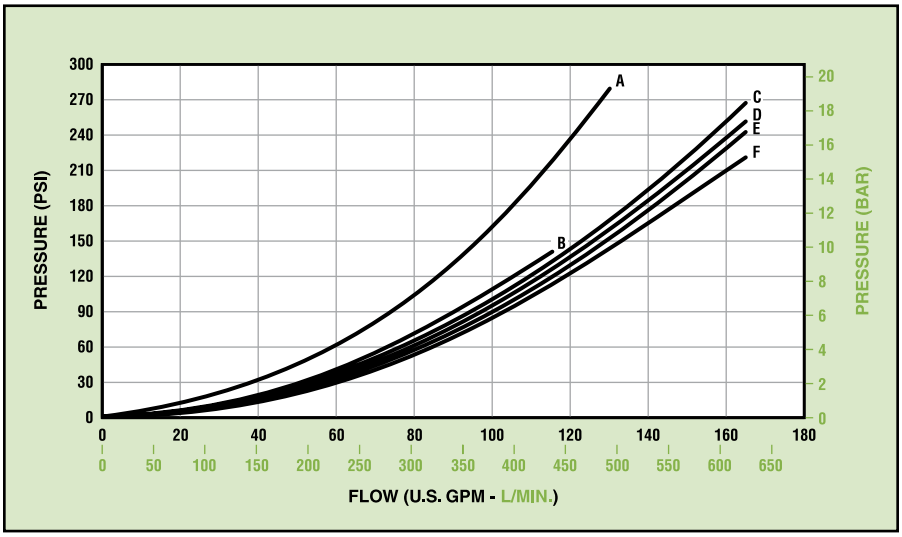

Flow Curve Reference

Flow Path	Spool Type 5	6	8	56	58
P→A	E	F	F	F	F
P→B	E	F	F	F	F
A→T	D	E	E	E	E
B→T	C	D	E	C	C
P→T	–	B	–	A	A

6600 Series Solenoid Piloted Models

Pilot Pressure:
Minimum, 65 psi (5 bar);
Maximum, 5000 psi (350 bar).

Solenoids:
These models use a D03 valve as a pilot. Models are available with standard AC or DC solenoids. Optional Plug-In-Terminal Solenoids fit DIN Connector, Standard 43650 Form A ("Hirschmann" type).

Refer to page 9 for "Electrical Connections" and "Explosion Proof Option".

6800 Series Hydraulic Piloted Models

Pilot Pressure:
Minimum, 110 psi (8 bar), except models with Code 3 internal operator, 65 psi (5 bar);
Maximum, 5000 psi (350 bar).

Required Volume (to shift spool full stroke):
1.71 in^3 (28,0 cm^3).

6900 Series Air Piloted Models

These models use an air piloted D03 valves as a pilot.

Air Pilot Pressure:
Minimum, 40 psi (3 bar);
Maximum, 200 psi (14 bar).

Required Volume (to shift spool full stroke:
0.22 in^3 (3,6 cm^3).

VALVE EFFICIENCY

Efficiency for all models is shown by the typical performance curves, above. The table identifies the appropriate pressure drop curve for each spool and flow path.

For example, in the table under spool Type 5, curve "E" is called out to determine the pressure drop for P→A. Looking at the curves, "E" indicates a drop of about 55 psi at 80 U.S. gpm (3,8 bar at 303 L/min).

To determine total "loop" drop, the individual pressure drops for P→A and B→T (or P→B and A→T) must be added.

INSTALLATION AND DIMENSIONS

Valve Mounting

The top drawing shows the standard N.F.P.A. D08 (CETOP 8) mounting surface. The drawing below shows the recommended mounting surface with larger ports providing lower pressure drop. Dynex D08H valves will mount on either pattern.

Port o-rings are included with valves.

Mounting bolts must be ordered separately: .500-13 U.N.C. Threaded x 1.50 inch (38,1 mm), Grade 8 or better, six required. Recommended mounting torque is 55 lb•ft (75 N•m).

Pilot and Drain Options

The "Section X-X" drawing shows the location of the plug for standard external drain on solenoid and air piloted models.

To convert to external pilot, remove the "access plug" (see main drawings) to install plug, 1/16-27 N.P.T.F., part number 10062450.

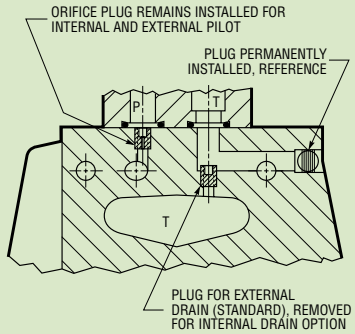

Section X-X

Solenoid Model Dimensions

Dimensions are shown for both AC and DC solenoids. DC configuration is shown printed in gray.

The overall length of a single solenoid model (not shown) is 12.68 inches (322,1 mm), the same as a double solenoid model (determined by the length of the main valve).

Weight (Mass):

Single Solenoid,
AC, 9.3 lb (4,2 kg); DC, 9.8 lb (4,4 kg).

Double Solenoid,
AC, 10.0 lb (4,5 kg); DC, 11.3 lb (5,1 kg).

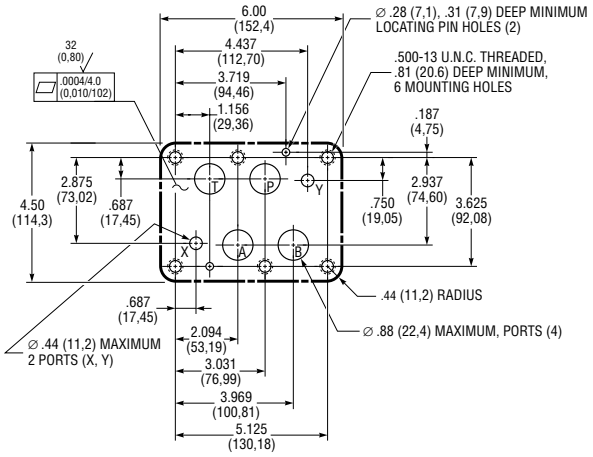

Minimum Mounting Surface, N.F.P.A. D08 (CETOP 8) Pattern

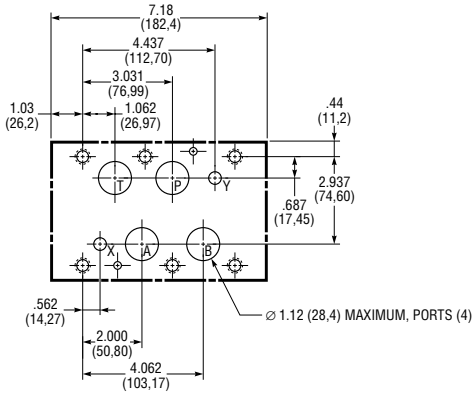

Recommended Mounting Surface for Best Flow Performance (Special Dynex Pattern)

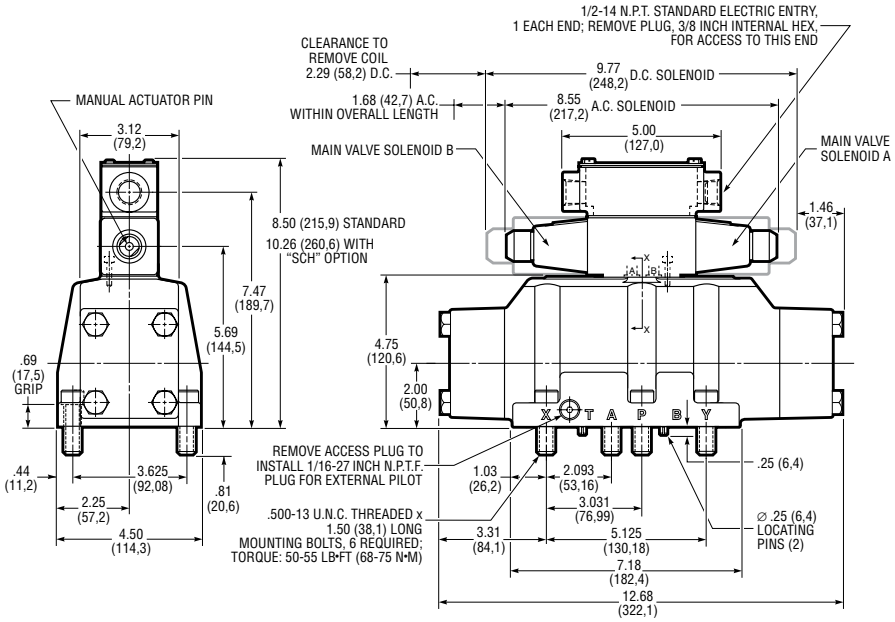

6600 Series, Double Solenoid Piloted Models

Explosion Proof Solenoids

"EP" solenoids with special enclosures are approved by UL and CSA for use in hazardous locations.

The overall length of models with a single "EP" solenoid (not shown) is 12.68 inches (322,1 mm), the same as a double solenoid model (determined by the length of the main valve).

Weight (Mass):

Single Solenoid, 41 lb (18,6 kg);
Double Solenoid, 47 lb (21,3 kg).

Direct Hydraulic Pilot Operated

As shown, these models use a cross-over block to direct pilot pressure from auxiliary ports "X" and "Y".

Weight (Mass):

33 lb (15,0 kg).

"X" and "Y" Port Function

Model	Port "X"	Port "Y"
681✳	Actuator A	External Drain
682✳	External Drain	Actuator B
685✳	Actuator A	Actuator B

Air Piloted Models

The overall length of a single actuator model (not shown) is 12.68 inches (322,1 mm), the same as a double solenoid model (determined by the length of the main valve).

Weight (Mass):

Single Actuator, 35 lb (15,9 kg);
Double Actuator, 36 lb (16,3 kg).

D08H SUBPLATE AND BOLT KITS

Part Number	Description
Subplate:	
PSO24-F-D08H-1.50	Side Ports, Pattern for S.A.E. 1-1/2 inch Flange (Code 62)
Mounting Bolt Kit:	
P24-BK	Six .500-14 U.N.C. Threaded x 1.50 inch (38,1 mm)

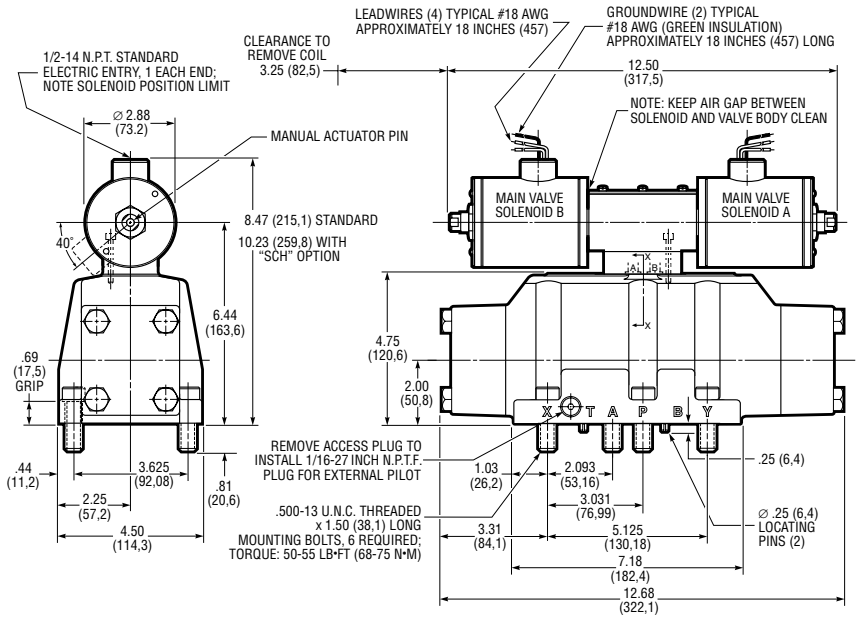

6600 Series, Double "EP" Solenoid Models

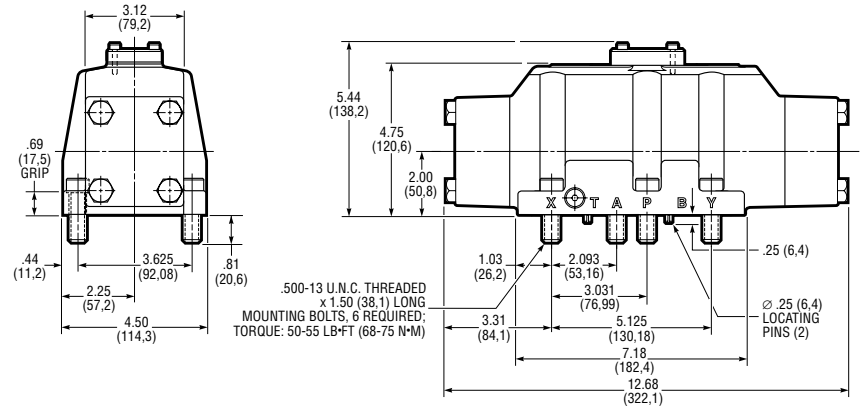

6800 Series, Direct Hydraulic Piloted Models

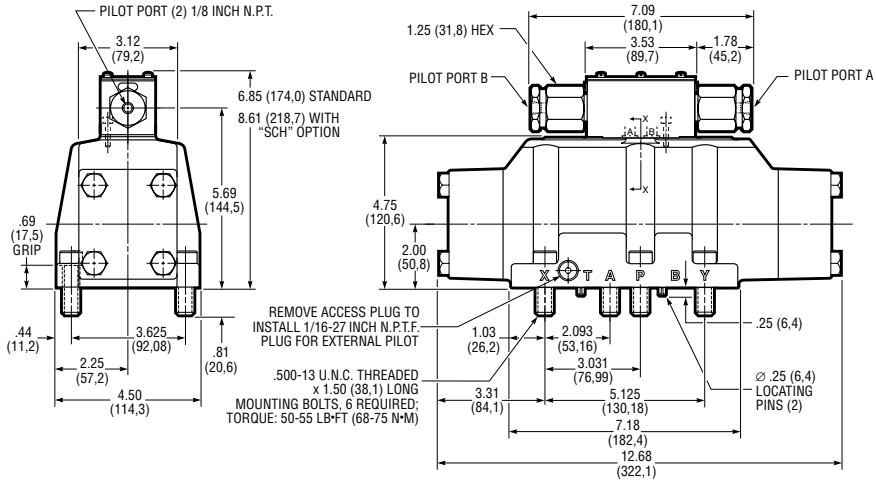

6900 Series, Double Air Piloted Models

TYPICAL MODEL CODE

6 6 4 5 – D08H – 115DF – R – T – CH – 1 0

Valve Type	
6	Subplate Mounted Directional Control

Actuator	
6	Solenoid Operated
8	Hydraulic Piloted
9	Air Piloted

Internal Operator	
1	Two Position: Spring Offset (P→B), Actuator Offset (P→A)
2	Two Position: Spring Offset (P→A), Actuator Offset (P→B)
3	Two Position: Actuator Offset, Detented
4	Two Position: Spring Centered, Actuator Offset①
5	Three Position: Spring Centered, Actuator Offset

① *For most spools, normal flow is actuator offset P→A. For Spool Types 56 or 58, normal flow is actuator offset P→B.*

Spools	
5	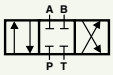
6	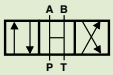
8	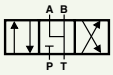
9	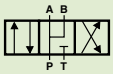
56①	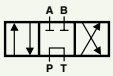
58②	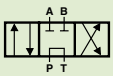

① *Closed Crossover*
② *Open Crossover*

Valve Size	
D08H	N.F.P.A. D08 (CETOP 8) Mounting Pattern with auxiliary "X" port (external pilot) and "Y" port (external drain)

Reverse Flow Option	
R	Reverse Flow (Code 4 Operator Only)

Solenoid Options	
BH3A	3-pin Connector for single solenoid models on port "A" end ①②③
BH3B	3-pin Connector for single solenoid models on port "B" end ①②③
BH5A	5-pin Connector for single or double solenoid models on port "A" end①②③
BH5B	5-pin Connector for single or double solenoid models on port "B" end①②③
C	CSA and UL Recognized Coils (Etched with Symbol)④
CG	Cable Grip for .38 to .44 inch (9,5 to 11,1 mm) O.D. machine tool cable①②
HT	High Pressure Tank Port: 2300 psi (160 bar) maximum AC models; 3000 psi (210 bar) maximum DC models
M	Hand Actuated Manual Override①
SL	Solenoid Lights (available 115DF AC only)①②
T	Terminal Strip①②

① *Option not available with "EP" solenoid models.*
② *Option not available with "Plug-In Terminal" solenoid models.*
③ *N.F.P.A. standard T3.539-1980; A.N.S.I. standard B93.55M-1981.*
④ *Available with 115DF solenoids only.*

General Options①	
CH	Flow Control (Pilot Choke) – 3000 psi (210 bar) maximum pressure
ID	Internal Drain
XP	External Pilot

① *Not available with hydraulic piloted models.*

Electrical Options			
Standard AC Solenoids (Dual Frequency):		*Standard DC Solenoids:*	
24DF	24V/60Hz, 24V/50Hz	12DC	12VDC
115DF	115V/60HZ, 110V/50Hz	24DC	24VDC
230DF	230V/60Hz, 220V/50Hz		
460DF	460V/60Hz, 440V/50Hz		
Plug-In Terminal AC Solenoids:①		*Plug-In Terminal DC Solenoids:①*	
115HA	115V/60Hz, 110V/50Hz	12HD	12VDC
230HA	230V/60Hz, 220V/50Hz	24HD	24VDC
Explosion-Proof AC Solenoids:		*Explosion-Proof DC Solenoids:*	
115EP	115V/60Hz	12EP	12VDC
110EP	110V/50Hz	24EP	24VDC
220EP	220V/50Hz		

① *Fits DIN Connector Standard 43650 Form A ("Hirschmann" type).*

VST SERIES SEATED VALVES

VALVE DESCRIPTION

VST valves operate at high pressures: 10 000 psi (700 bar) for directional valves, and 15 000 psi (1040 bar) for vent functions.

These seated valves provide critical advantages compared to spool valves.

Spool lock, caused by a build-up of fine 'silt' particles, can occur when a spool is held in a fixed position at high pressure. Silting does not occur in this seated valve design. The result is reliable shifting, even when the valve remains unactuated for long periods at high pressure.

Positive sealing also makes this design ideal for circuits requiring load holding functions.

Valve Functions

VSTV and VST22 models are two position, two-way valves for venting, unloading, dumping or similar on/off "switching" functions.

VST23 models for three-way directional control are ideal for circuits which require locking of acutuators used in clamping systems, presses and load-holding applications.

Mounting

Special HP03 pattern. Refer to page 44.

Operation

VSTV: Vent Valve;
VST22: Two Position, Two-Way;
VST23: Two Position, Three-Way.

Rated Flow

VST Vent Valves:
Nominal, 1 U.S. gpm (3,8 L/min);
Maximum, 2 U.S. gpm (7,6 L/min).

VST22 and VST23 Valves:
Nominal, 5 U.S. gpm (19 L/min);
Maximum, 10 U.S. gpm (38 L/min) for some models. See "Valve Flow Capacity".

Flow Capacity – Solenoid Models

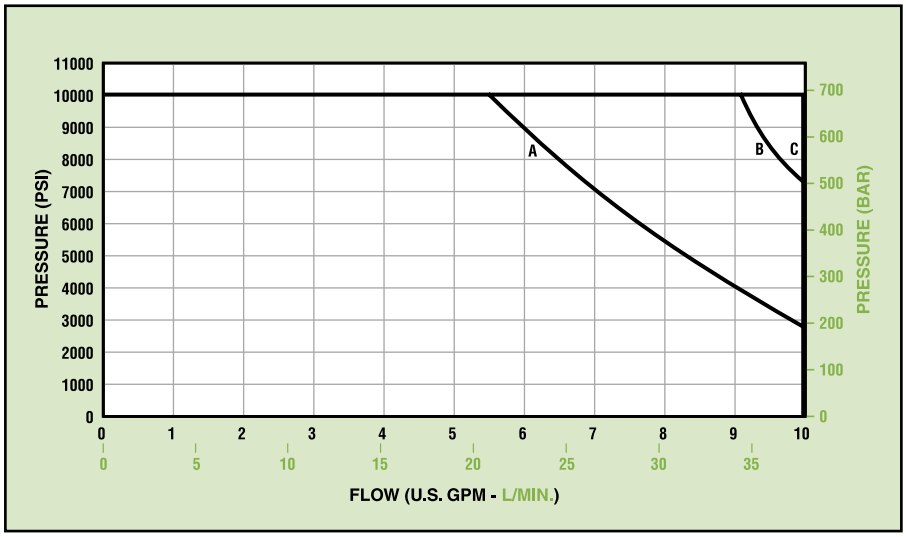

Rated Pressure

VST Vent Valves:
15 000 psi (1040 bar).

VST22 and VST23 Valves:
10 000 psi (700 bar).

Tank Port Pressure (Maximum)

Solenoid Actuated Models:
Standard,
1500 psi (70 bar);
High Pressure Option ("HT"),
AC models, 2000 psi (140 bar);
DC models, 2500 psi (170 bar).

Hydraulic and Air Actuated Models:
3000 psi (210 bar).

Plug-in Terminal Solenoid

All models feature Plug-In-Terminal Solenoids, which fit DIN Connector, Standard 43650 Form A ("Hirschmann" type).

For electrical specifications, see page 6.

Solenoid Response Time (ms)

	On		Off	
Model	AC	DC	AC	DC
VSTV	10-18	25-30	20	35
VST22	15-20	30-35	20	35-40
VST23	15-20	30-35	20	35-40

Flow Curve Reference

Model (Operation)	Function	Curve
VST22	PT	B
	PC	C
VST23	BT-PC	A
	PB-TC	C

Explosion Proof Option ("EP")

Solenoids with special enclosures are approved by UL and CSA for use in hazardous locations.

UL Classification:
Class I, Group C, D;
Class II, Group E, F, G.

VALVE FLOW CAPACITY

VSTV Models

All vent valves have a nominal rating of 1 U.S. gpm (3,8 L/min), with maximum capacity of 2 U.S. gpm (7,6 L/min).

Solenoid Actuated Directional Valves

The flow capacity curves show typical performance for VST22 and VST23 models. The letters in the "Flow Curve Reference" table identify the appropriate curve for each function.

Hydraulic and Air Actuated Models

Generally, the maximum flow for VST22 or VST23 models is 10 U.S. gpm (38 L/min).

Minimum Pilot Pressure:
Hydraulic, 350 psi (24,1 bar);
Air, 40 psi (2,8 bar).

These values are based on zero tank pressure. For hydraulic actuated models, as back pressure increases above zero, the minimum pilot pressure must be increased by the same amount.

Maximum Pilot Pressure:
Hydraulic, 3000 psi (207 bar);
Air, 200 psi (13,8 bar).

Required Volume to shift the valve:
Hydraulic, 0.018 in^3 (0,30 cm^3);
Air, 0.640 in^3 (10,49 cm^3).

VALVE EFFICIENCY

Efficiency for all models is shown by the typical performance curves. The table identifies the appropriate pressure drop curve for specific model, function and flow path.

An Example

In the table for VST23 models with function BT-PC (spring offset B→T, P closed), curve "C" is called out for flow path B→T. Looking at the curves, "C" indicates a drop of about 190 psi (13 bar) at 5 U.S. gpm (19 L/min).

Pressure Drop (ΔP)

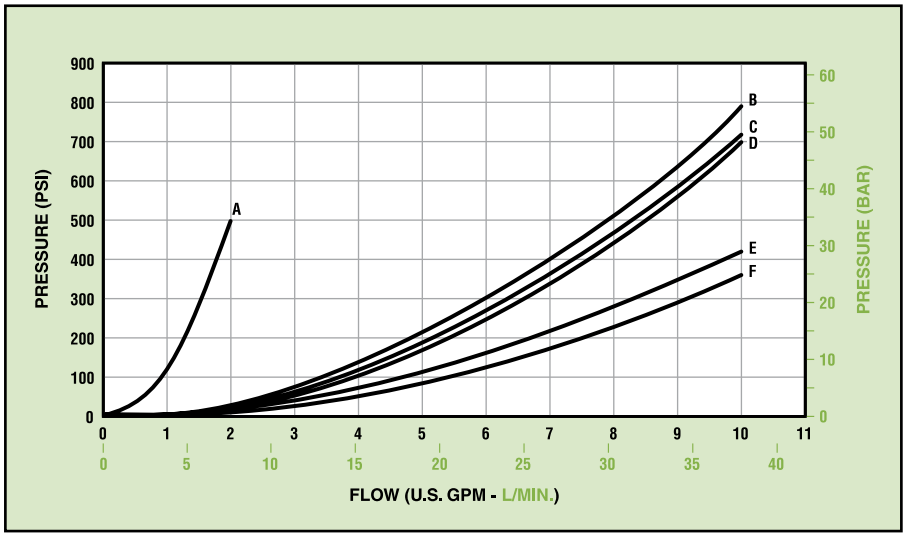

Flow Curve Reference

Model (Operation)	Function	Curve
VSTV	NO	A
	NC	A
VST22	PT	E
	PC	F
VST23	*BT-PC:*	
	Flow Path B→T	C
	Flow Path P→B	B
	PB-TC:	
	Flow Path P→B	D
	Flow Path B→T	F

INSTALLATION AND DIMENSIONS

The valve body and overall dimensions vary depending upon the valve operator Refer to the variable dimension tables.

HP03 Valve Mounting

The mounting surface drawing shows the minimum flush or raised surface required for this special pattern.

As indicated, port "B" is required for Models VSTV and VST23; port "P" is required for VST22 and VST23.

Port o-rings are included with valves.

Mounting bolts must be ordered separately: .250-20 U.N.C. Threaded x 2.00 inch (50,8 mm), Grade 8 or better, four required. Recommended mounting torque is 12 lb•ft (16 N•m).

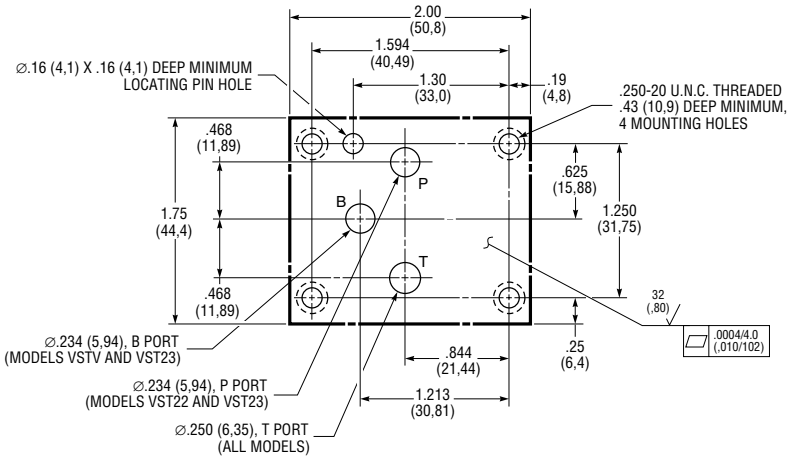

Minimum Mounting Surface, Special HP03 Pattern

Solenoid Model Dimensions

The drawing shows dimensions for both AC and DC solenoids. DC configuration is shown printed in gray.

Weight (Mass):

Model VSTV,
AC, 7.2 lb (3,3 kg);
DC, 8.5 lb (3,9 kg).

Model VST22,
AC, 8.1 lb (3,7 kg);
DC, 9.5 lb (4,3 kg).

Model VST23,
AC, 8.8 lb (4,0 kg);
DC, 10.2 lb (4,6 kg).

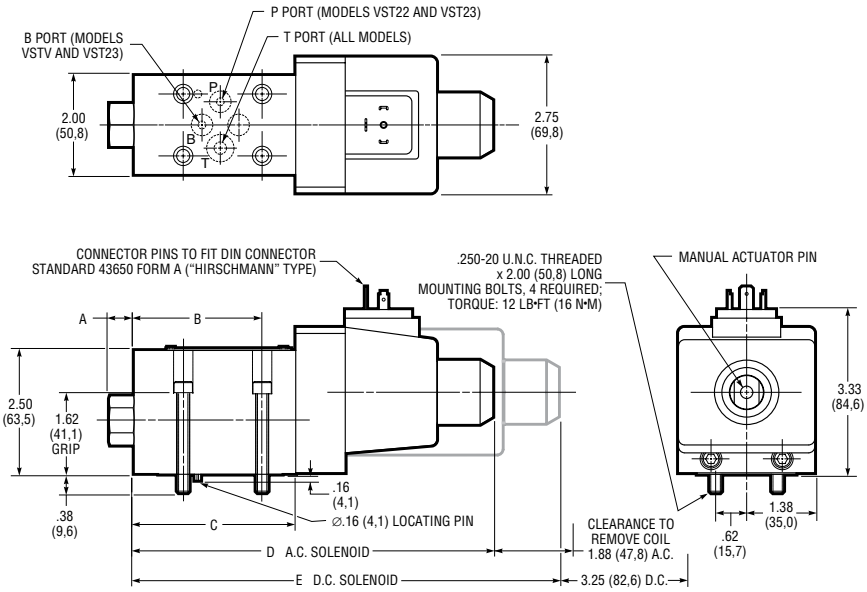

Solenoid Actuator Models (Standard Plug-In Terminal)

Variable Dimensions

Dimension	Valve Model		
	VSTV	VST22	VST23
A	0.31 (7,9)	0.50 (12,7)	0.50 (12,7)
B	1.94 (49,3)	2.59 (65,8)	3.05 (77,5)
C	2.53 (64,3)	3.26 (82,8)	3.73 (94,7)
D	6.52 (165,6)	7.25 (184,2)	7.71 (195,8)
E	7.86 (199,6)	8.59 (218,2)	9.05 (230,0)

Explosion Proof Solenoids

A kit with a spacer plate (part number KVH0301066) is required when EP valves are mounted on manifolds, or when used as a pilot valve.

Weight (Mass):

Model VSTV, 14.8 lb (6,7 kg);
Model VST22, 15.7 lb (7,1 kg);
Model VST23, 16.4 lb (7,4 kg).

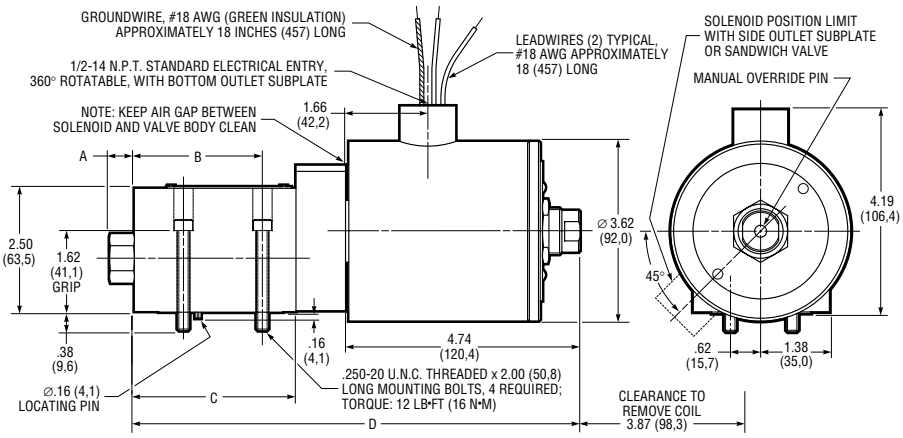

Explosion Proof Solenoid Models ("EP" Actuator Option)

Variable Dimensions

Dimension	Valve Model		
	VSTV	VST22	VST23
A	0.31 (7,9)	0.50 (12,7)	0.50 (12,7)
B	1.94 (49,3)	2.59 (65,8)	3.05 (77,5)
C	2.53 (64,3)	3.26 (82,8)	3.73 (94,7)
D	8.27 (210,1)	9.00 (228,6)	9.47 (240,5)

Hydraulic Piloted Models

Weight (Mass):

Model VSTV, 6.2 lb (2,8 kg);
Model VST22, 7.1 lb (3,2 kg);
Model VST23, 7.8 lb (3,5 kg).

Variable Dimensions

Dimension	Valve Model		
	VSTV	VST22	VST23
A	0.31 (7,9)	0.50 (12,7)	0.50 (12,7)
B	1.94 (49,3)	2.59 (65,8)	3.05 (77,5)
C	2.53 (64,3)	3.26 (82,8)	3.73 (94,7)
D	5.56 (141,2)	6.29 (159,8)	6.76 (171,7)

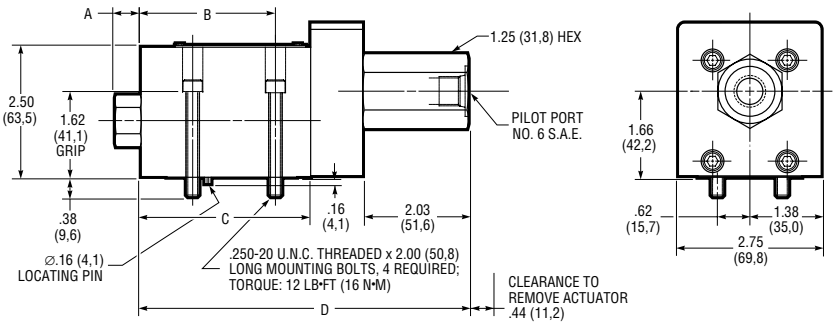

Hydraulic Actuated Models ("H" Actuator Option)

Air Piloted Models

Weight (Mass):

Model VSTV, 7.0 lb (3,2 kg);
Model VST22, 7.9 lb (3,6 kg);
Model VST23, 8.6 lb (3,9 kg).

Variable Dimensions

Dimension	Valve Model		
	VSTV	VST22	VST23
A	0.31 (7,9)	0.50 (12,7)	0.50 (12,7)
B	1.94 (49,3)	2.59 (65,8)	3.05 (77,5)
C	2.53 (64,3)	3.26 (82,8)	3.73 (94,7)
D	6.09 (154,7)	6.82 (173,2)	7.29 (185,2)

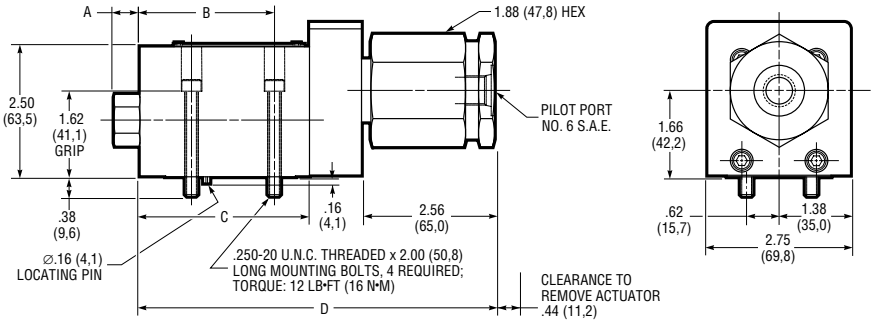

Air Actuated Models ("A" Actuator Option)

VST SUBPLATE AND BOLT KITS

Part Number	Description
Subplates:	
PSO32-VST-SAE8	Side Ports, No. 8 S.A.E.
PS032-VST-BSP6	Side Ports, G 3/8 (B.S.P.)
PS032-VST-.56MP	Side Ports, 9/16 Medium Pressure Coned and Threaded, .8125-16 U.N. Threaded①
Mounting Bolt Kit:	
P22-BK-32	Four .500-20 U.N.C. Threaded x 2.00 inch (50,8 mm)
Spacer Plate Kit:	
KVH0301066	Permits mounting of "EP" valves on PS0 subplate or manifold.

① *"P" port uses Autoclave Medium Pressure, Butech M/P or equivalent fitting.*

TYPICAL MODEL CODE

VST 23 BT - PC – HP03 – 115HA – ✳ – ✳ – 1 0

Valve Type	
VST	Subplate Mounted Seated Valve

Operation	
22	Two Position, Two-Way
23	Two Position, Three-Way
V	Vent

Functions①		
Vent Valve:		
NO	Spring Offset Open	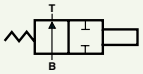
NC	Spring Offset Closed	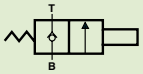
Two Position, Two-Way:		
PT	Spring Offset Open	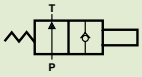
PC	Spring Offset Closed	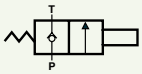
Two Position, Three-Way:		
BT-PC	Spring Offset B→T, P Closed	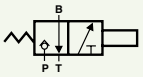
PB-TC	Spring Offset P→B, T Closed	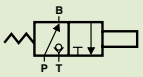

① *As shown in the schematic, the "T" port on these valves must be connected to tank. For maximum tank port pressures, refer to page 43.*

Mounting Pattern	
HP03	High Pressure Special Mounting Pattern

Electric Options	
HT	High Pressure Tank Port, Maximum: AC models, 2000 psi (140 bar); DC models, 2500 psi (170 bar).
M	Hand Actuated Manual Override

Actuator	
Plug-In Terminal Solenoids:①②	
115HA	Dual Frequency AC, 115V/60Hz/110V/50Hz
230HA	Dual Frequency AC, 230V/60Hz/220V/50Hz
12HD	12VDC
24HD	24VDC
Explosion-Proof Solenoids:②	
115EP	115V/60Hz
110EP	110V/50Hz
220EP	220V/50Hz
Hydraulic:	
H	Hydraulic Actuator
Air:	
A	Air Actuator

① *Fits DIN Connector Standard 43650 Form A ("Hirschmann" type).*
② *For other voltages, contact the Dynex sales department.*

Design Number

Modification Number

Seals	
No Code (Standard)	Fluorocarbon (Viton® or equivalent)
E	EPR
N	Buna-N

VALVE DESCRIPTION

VSW Series valves are installed under Dynex high pressure control valves which mount on the special HP03 and HP05 pattern.

These sandwich accessory valves can simplify circuits and reduce installation costs in high pressure systems.

HP03 models are rated to 10 000 psi (700 bar). HP05 models are rated to 8000 psi (560 bar).

Valve Functions

Refer to "Typical Model Code" on page 51 for function flow symbols.

P→T Relief:
Models, VSWRLPT-HP03-10
VSWRLPT-HP05-10;

A,B→T Dual Relief:
Models, VSWRLABT-HP03-10
VSWRLABT-HP05-10;
P→T Decompression:
Model VSWDPT-HP05-✳-10;

A,B→T Dual Decompression:
Model VSWDABT-HP05-✳-10;

Dual Pilot Operated Check:
Model VSWCHAB-HP03-20;
Ratio to open the valve is approximately 7:1 at 10 000 psi (700 bar). The valve will unseat when internal pilot pressure reaches about 14% (1/7) of the load pressure.

Model VSWDABT-HP05-10;
Ratio to open the valve is approximately 4:1 at 8000 psi (560 bar). The valve will unseat when internal pilot pressure reaches about 25% (1/4) of the load pressure.

Seals

Standard o-rings are fluorocarbon (Viton® or equivalent) providing greater fluid compatibility and operation over a wider temperature range.

Optional seals include Buna-N or EPR for use with some phosphate ester fluids. Contact the Dynex sales department for complete ordering information.

Mounting

Port o-rings are included with valves. Mounting bolts must be ordered separately. Refer to Bolt Kits on page 49 for HP03 pattern and page 50 for HP05 pattern.

VSW-HP03 SPECIFICATIONS

Mounting

Special HP03 mounting interface.

Rated Pressure

10 000 psi (700 bar).

Flow

Model VSWRL1PT and Model VSWRLABT:
5 U.S. gpm (19 L/min) nominal;
10 U.S. gpm (38 L/min) maximum;
0.5 U.S. gpm (1,9 L/min) minimum.

Model VSWCHAB:
5 U.S. gpm (19 L/min) nominal;
8 U.S. gpm (30 L/min) maximum;
No minimum flow requirements.

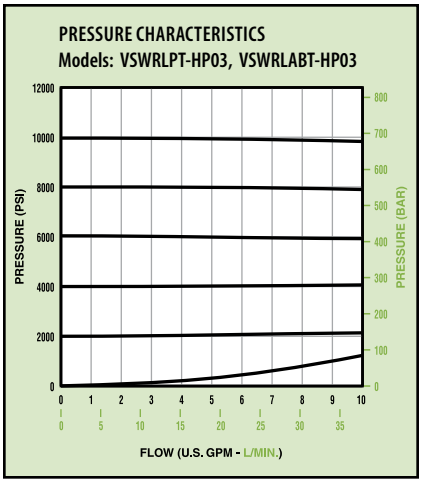

VSW-HP05 SPECIFICATIONS

Mounting

Special HP05 mounting interface.

Rated Pressure

8000 psi (560 bar).

Maximum Drain Port Pressure (Optional Electric Vent Valve)

Standard:
1500 psi (70 bar);

"D" option, high pressure tank port:
AC models, 2000 psi (140 bar);
DC models, 2500 psi (170 bar).

Flow

All models: 5 U.S. gpm (57 L/min).

Venting Options

The standard relief valve has a blocked vent port. Decompression models must be vented and this option must be specified in model code.

Options for both valves include a remote vent port adapter or an integral vent valve (electric, air or hydraulic actuator).

External Drain

External drain is available on relief and decompression valves by specifying the "XD" option. The internal configuration for this function includes plug, part number 10590270, which is factory installed.

For in-the-field conversions, contact the Dynex sales department.

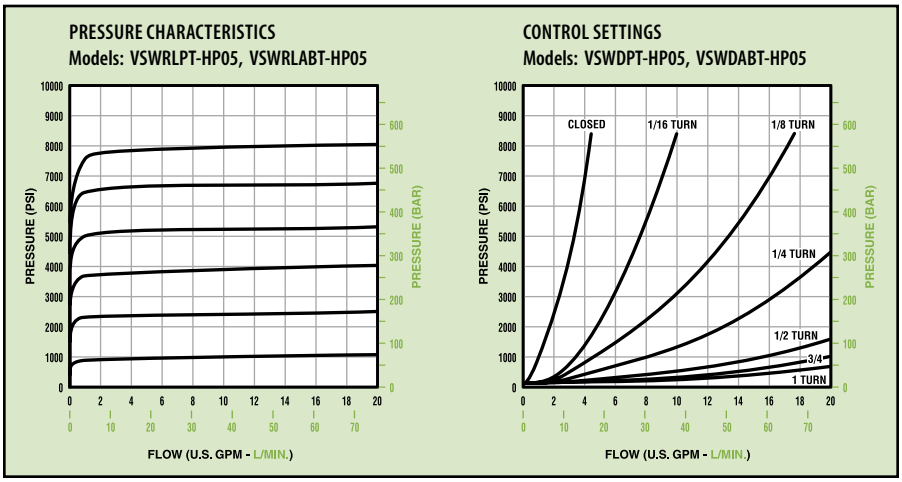

VALVE EFFICIENCY

Loop pressure drop (ΔP) is the combined drop through the valve (P→A + B→T or P→B + A→T).

The pressure drop curve for check valve models includes resistance to flow through the HP03 directional valve. Valves with Type 3 spool (pressure blocked, "A" and "B" open to tank in the center position) were used to determine typical performance.

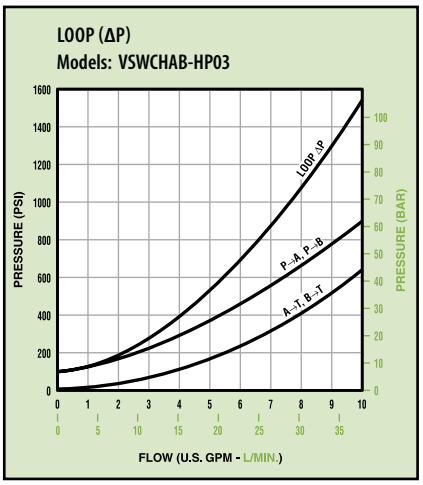

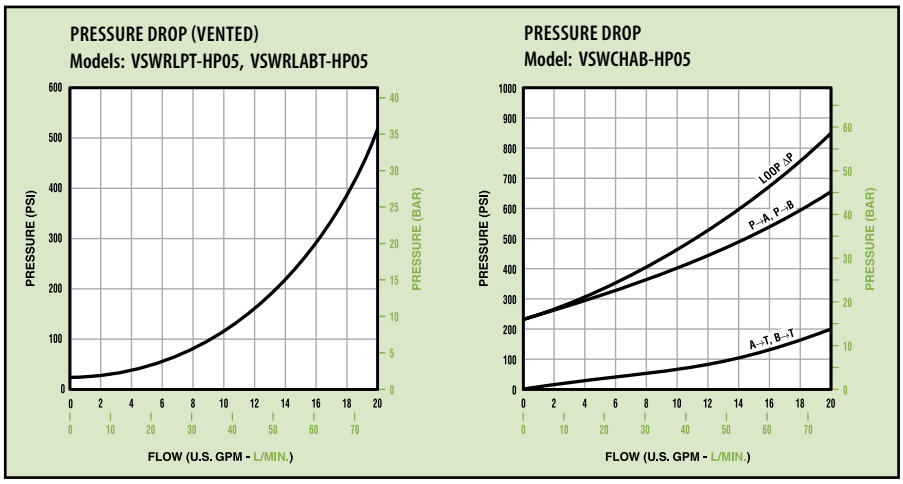

INSTALLATION AND DIMENSIONS

HP03 Pattern

These models mount on the HP03 special mounting pattern. See page 17 for minimum mounting surface requirements.

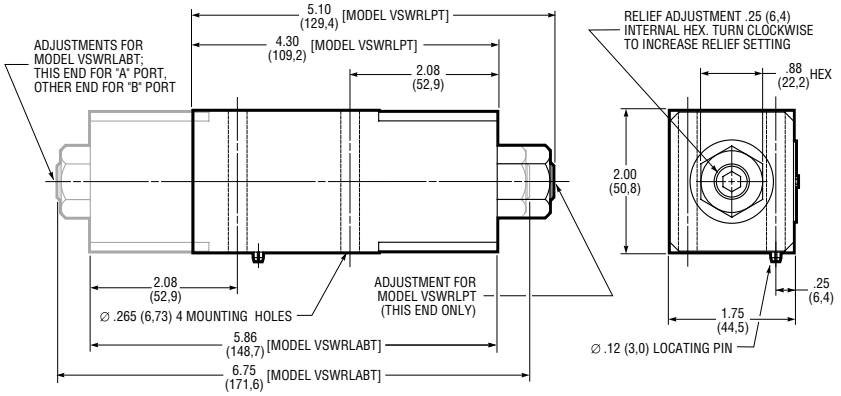

Model VSWRLPT-HP03-10 (P→T Relief Valve) and Model VSWRLABT-HP03-10 (A,B→T Relief Valve), Shown Printed in Gray

VSW-HP03 BOLT KITS

Item: Part Number	Description
Bolt Kit: P11-BK-44	For mounting one VSWRL** on 6000 Series (HP03 pattern): Four .250-20 U.N.C. Threaded x 2.75 inches (69,8 mm)
Bolt Kit: P11-BK-64	For mounting one VSWRL** on VST Series (HP03 pattern): Four .250-20 U.N.C. Threaded x 4.00 inches (101,6 mm)
Bolt Kit: P11-BK-36	For mounting one VSWCHAB on 6000 Series (HP03 pattern): Four .250-20 U.N.C. Threaded x 2.25 inches (57,2 mm)
Bolt Kit: P11-BK-56	For mounting one VSWCHAB on VST Series (HP03 pattern): Four .250-20 U.N.C. Threaded x 3.50 inches (88,9 mm)

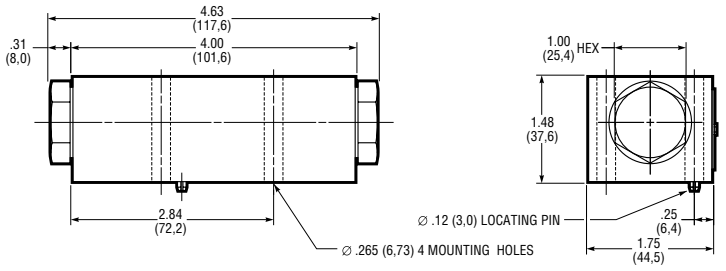

Model VSWCHAB-HP03-20 (Dual Pilot Operated Check Valve)

HP05 Pattern

These models mount on the HP05 special mounting pattern. Refer to page 27 for minimum mounting surface requirements.

Configurations for dual relief and decompression valves, with two pressure adjustments, are shown printed in gray.

The relief valve drawing shows the standard blocked vent port adapter. Venting options for both valves are shown in the decompression valve drawing. Decompression models must be vented and should be specified in model code.

HP05 Mounting Bolt Kits

Mounting bolts must be ordered separately in kit P31-BK-60. This kit contains four .3125-18 U.N.C. Threaded x 3.75 inches (95,2 mm) long, for mounting one VSW valve.

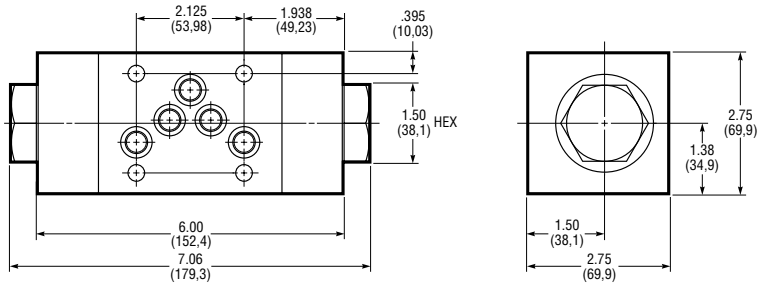

Model VSWCHAB-HP05-✳-10 (Dual Pilot Operated Check Valve)

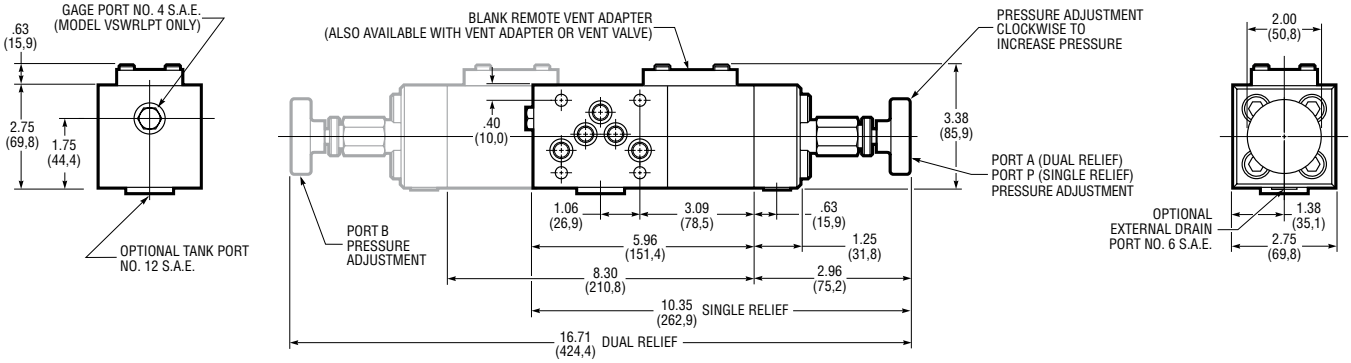

Model VSWRLPT-HP05-✳-10 (P→T Relief Valve) and
Model VSWRLABT-HP05-✳-10 (A, B→T Dual Relief Valve) Shown Printed in Gray

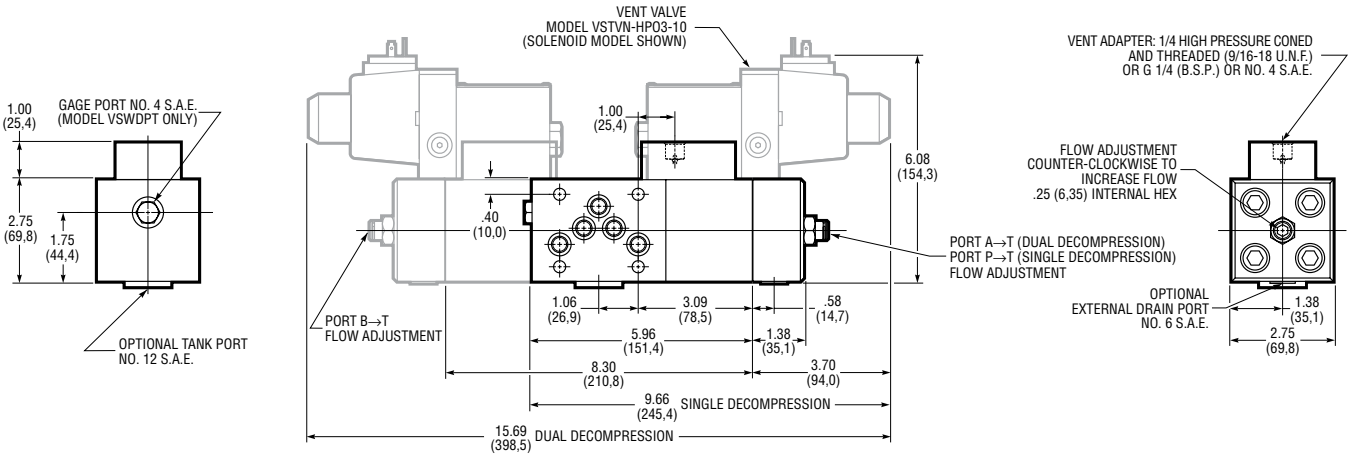

Model VSWDPT-HP05-✳-10 (P→T Decompression Valve) and
Model VSWDABT-HP05-✳-10 (A, B→T Dual Decompression Valve) Shown Printed in Gray

TYPICAL MODEL CODE

VSW RL PT – HP05 CR – EO – 115HA – D – XD – ✳ – 1 0

Valve Type
Sandwich Valve

Function	
CH	Check Valve
D	Decompression Valve①
RL	Relief Valve

① *Not available with HP03 Pattern models.*

Mounting Pattern (Special High Pressure)	
HP03	HP03 Pattern
HP05	HP05 Pattern

Vent Options (HP05 Only)①	
No Code	Vent Port Blocked②
AC	Air Vent, Normally Closed
AO	Air Vent, Normally Open
AV	Vent Port, 1/4 High Pressure Coned and Threaded, 9/16-18 U.N.F.③④
BV	Vent Port, G 1/4 (B.S.P.)④⑤
CR	Corrosion Resistant Adjustment⑥
EC	Electric Vent, Normally Closed
EO	Electric Vent, Normally Open
HC	Hydraulic Vent, Normally Closed
HO	Hydraulic Vent, Normally Open
SV	Vent Port, No. 4 S.A.E.④

① *Not available with "CH" check valve function.*
② *Not available with "D" function.*
③ *Port uses Autoclave, Butech or equivalent fittings.*
④ *Vent port adaptor block not offered with Electric, Air or Hydraulic Vent function options.*
⑤ *Vent port uses British Standard Pipe fittings.*
⑥ *Available with relief valve function only.*

Modification Number
0

Design Number	
1	HP05 All Functions, HP03 Relief Valve
2	HP03 Check Valve

Seals	
No Code (Standard)	Fluorocarbon (Viton® or Fluorel®)
E	EPR①
N	Buna-N①

① *Contact the Dynex sales department for complete ordering information.*

Drain Options (HP05 Only)	
No Code	Standard Internal Drain
XD	External Drain

"EV" General Options (HP05 Only)	
D	High Pressure Tank Port, Maximum: AC models, 2000 psi (140 bar); DC models, 2500 psi (170 bar).
M	Hand Actuated Manual Override

① *Fits DIN Connector Standard 43650 Form A ("Hirschmann" type).*
② *For other voltages, contact the Dynex sales department.*

"EV" Electric Options (HP05 Only)	
Plug-In Terminal Solenoids:①②	
115HA	Dual Frequency AC, 115V/60Hz/110V/50Hz
230HA	Dual Frequency AC, 230V/60Hz/220V/50Hz
12HD	12VDC
24HD	24VDC
Explosion-Proof Solenoids:②	
24EP	24VDC
115EP	115V/60Hz
110EP	110V/50Hz
220EP	220V/50Hz

① *Fits DIN Connector Standard 43650 Form A ("Hirschmann" type).*
② *For other voltages, contact the Dynex sales department.*

Options

		HP03 Pattern	*HP05 Pattern*
Check Valves:			
AB	Dual Pilot Operated Check	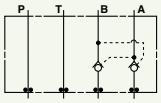	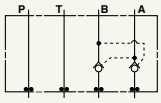
Relief Valves:			
PT	P→T Relief	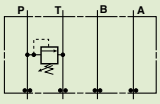	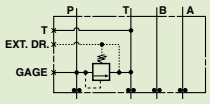
ABT	A, B→T Dual Relief	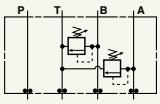	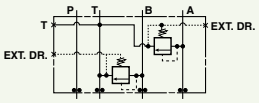
Decompression Valves:			
PT	P→T Decompression	–	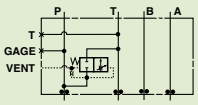
ABT	A, B→T Dual Decompression	–	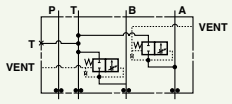

Hydraulic Products Used with Confidence Throughout the World

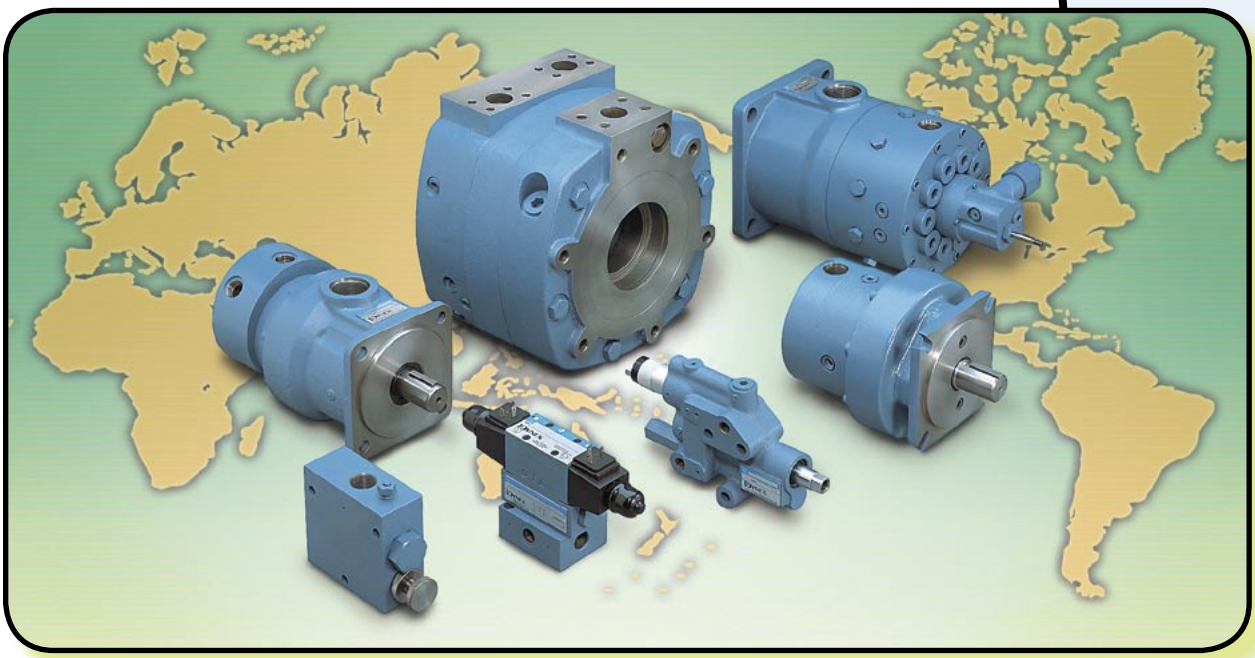

Dynex manufactures hydraulic components and systems sold worldwide for over 45 years. These products provide increased life and performance essential in critical environments. Demanding conditions include high pressure, dirty environments, contamination, special fluids, extreme temperature ranges and long, difficult duty cycles.

Products include piston pumps rated to 20 000 psi (1380 bar), directional and pressure control valves rated to 15 000 psi (1040 bar), heavy-duty piston motors, low-speed high-torque (LSHT) vane motors, electrohydraulic proportional actuators, and standard power units or specialized hydraulic systems.

Download Dynex Product Specifications!

www.dynexhydraulics.com

Go!

DYNEX

High Pressure Hydraulics

USA Headquarters
770 Capitol Drive
Pewaukee, WI 53072
Tel: 262-691-0300
FAX: 262-691-0312
E-mail: sales@dynexhydraulics.com

Power Units & Systems
54 Nickerson Road
Ashland, MA 01721
Tel: 508-881-5110
FAX: 508-881-6849
E-mail: ashland@dynexhydraulics.com

European Sales
Unit C5 Steel Close, Little End Road,
Eaton Socon, Huntingdon,
Cambs. PE19 8TT United Kingdom
Tel:+44 (0) 1480 213980 FAX:+44 (0) 1480 405662
E-mail: sales@dynexhydraulics.co.uk

Copyright © Dynex/Rivett Inc. Printed in U.S.A. Bulletin VES.DC-1111